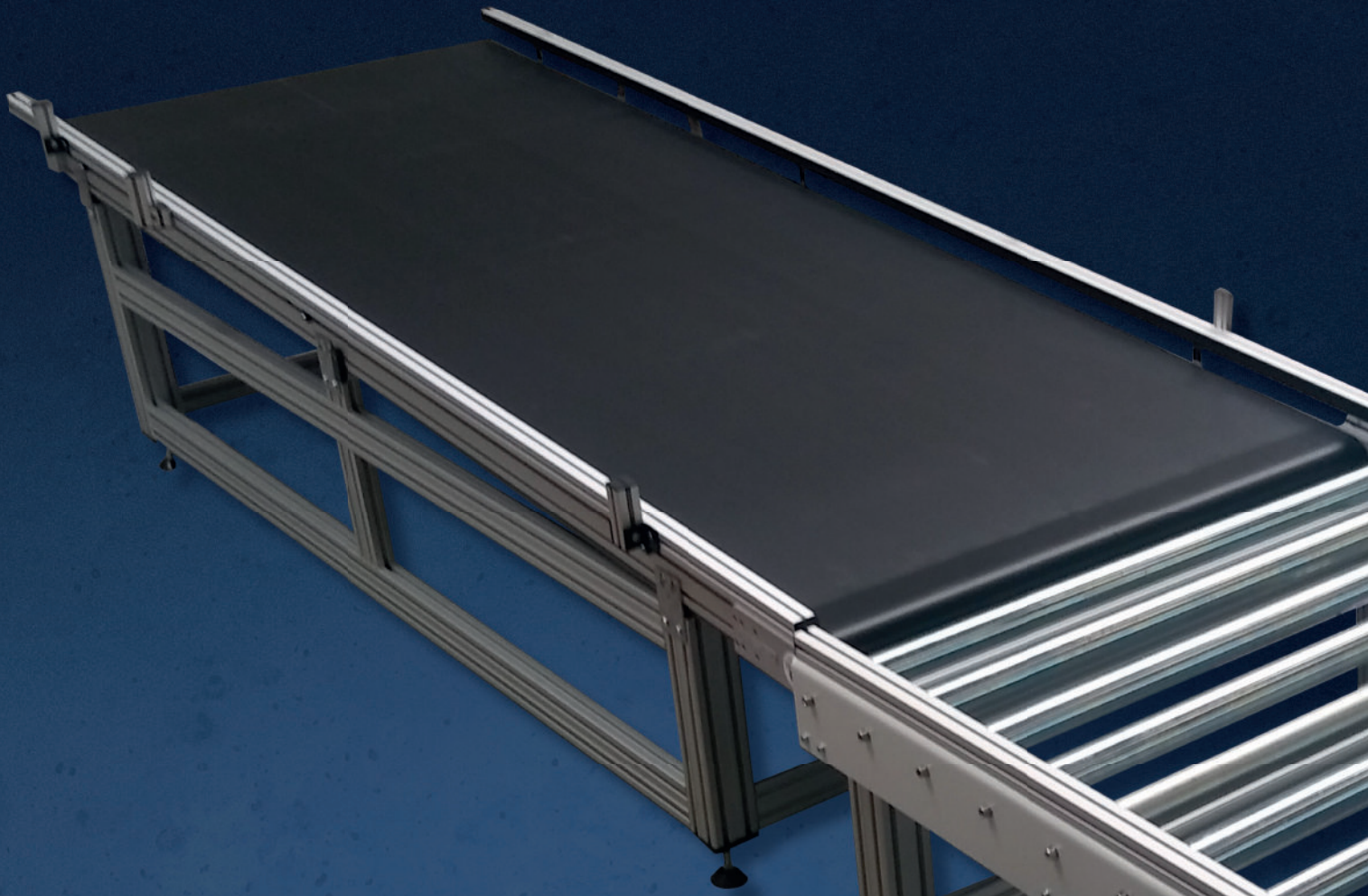

Technical sheet
Flat Belt conveyor C40

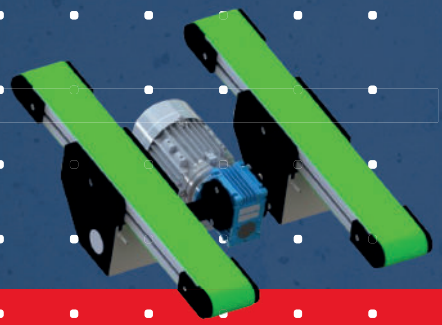

elcom by hellomoov'

CONVEYOR 40 FLAT BELT

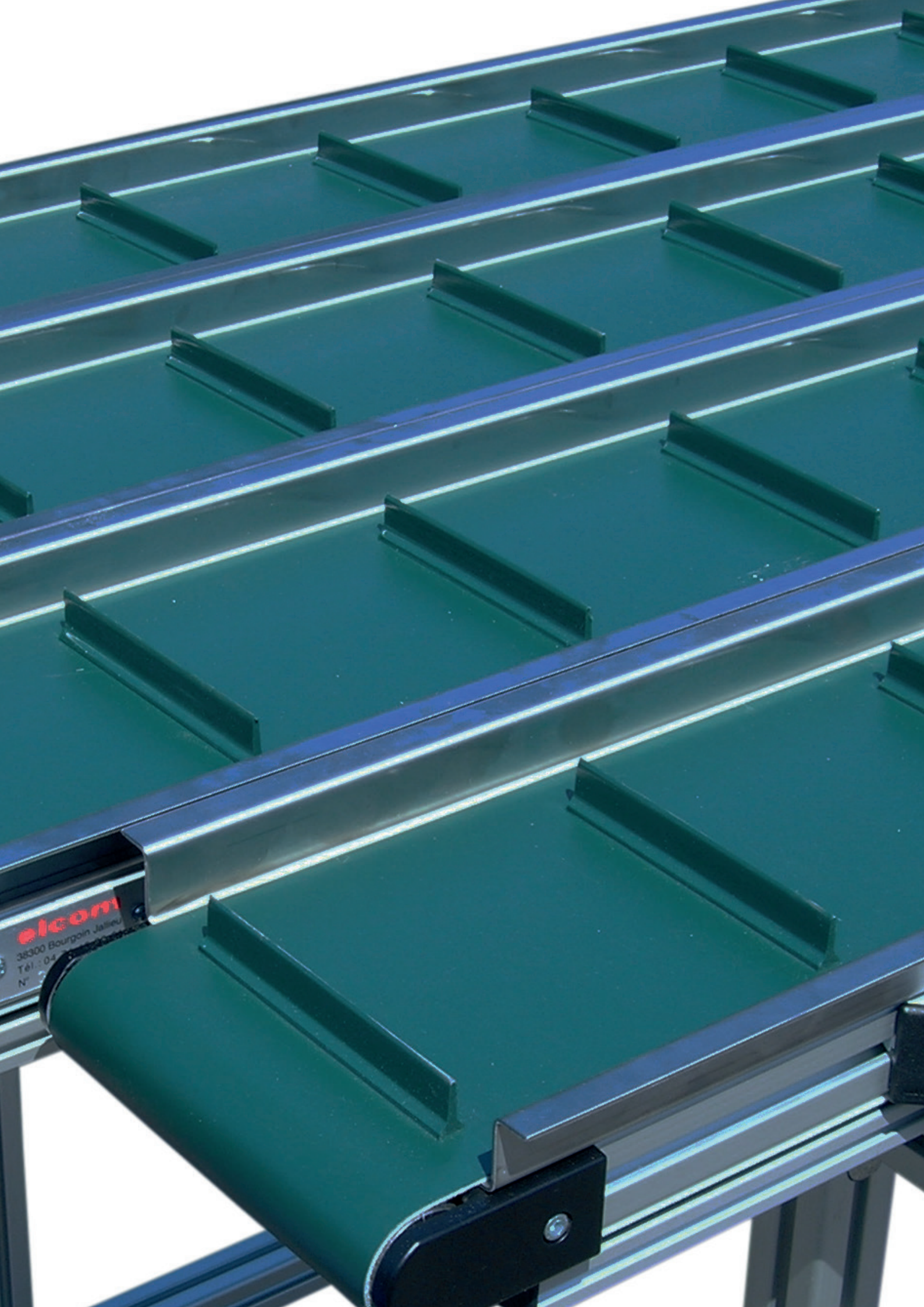
elcom
38300 Bourgoin Jallieu

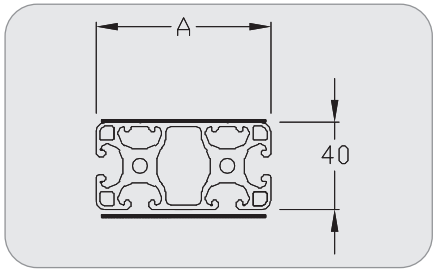

Conveyor 40

Flat belt
Central drive
Widths 40, 80, 120, 160, 200, 250, 300, 400 mm

Technical data

Compact conveyor on profiles 8 basis 40 mm, for all kinds of components.

- x Adjustable position of the drive along the profile
- x Steel pulleys with ball bearings
- x Stainless steel plate from 200 to 400 mm, otherwise on option

Dimensions (mm)

- x Width A: 40 - 80 - 120 - 160 - 200 - 250 - 300 - 400
- x Length L: 400 to 6 000
- x Width of belt: A - 5
- x Length of belt:
  Lc= (2xL+375) x 0,992
- x Length of profile: LP= L-50

Gear motors

- x 230 V single-phase and 230/400 V three-phase
- x Speed (m/min) +/- 10 %:
  2 - 3 - 6 - 9 - 12 - 18 - 24
- x 24 Vcc on request

Gear motors data: Page 106

Belts

Recommended installation tension:
0,5 % maxi

Belt data: Page 104

Permissible loads: see loads data page 11.

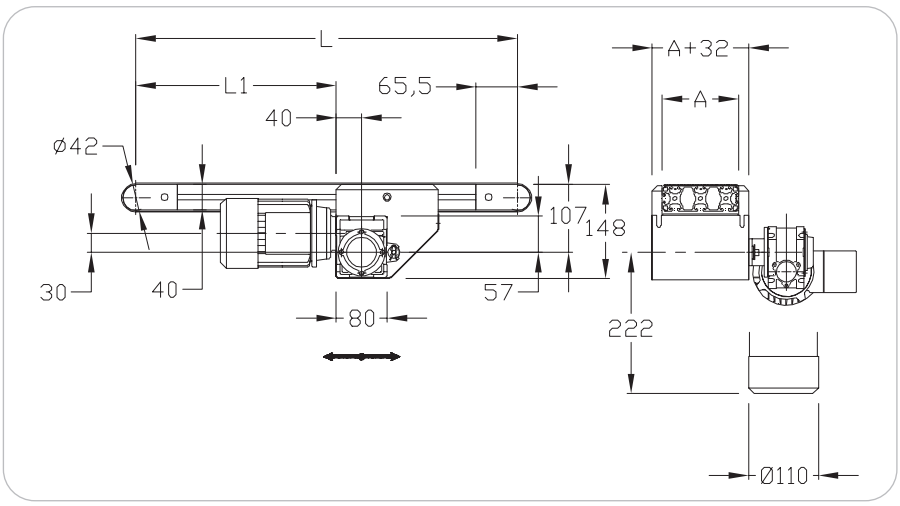

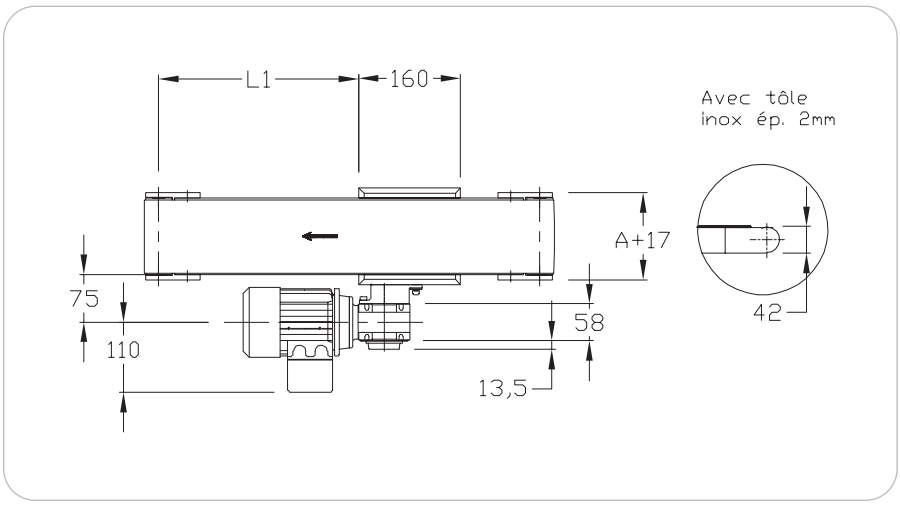

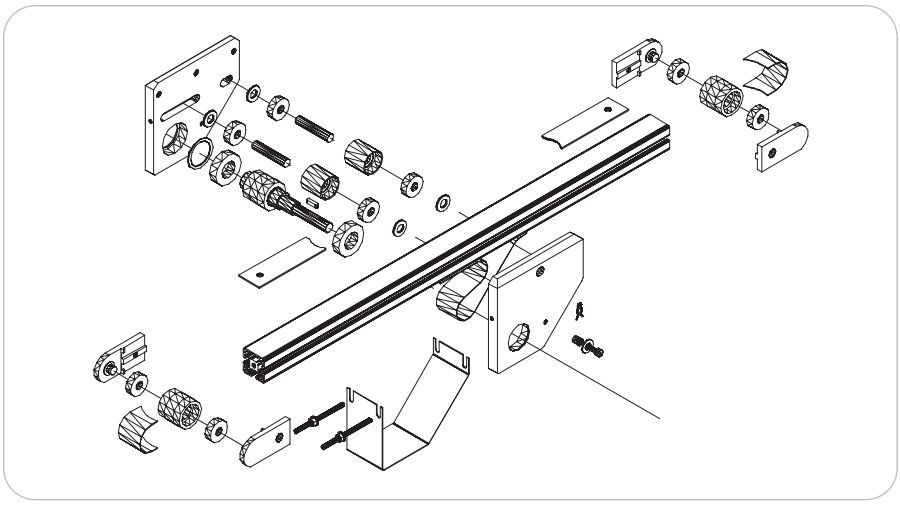

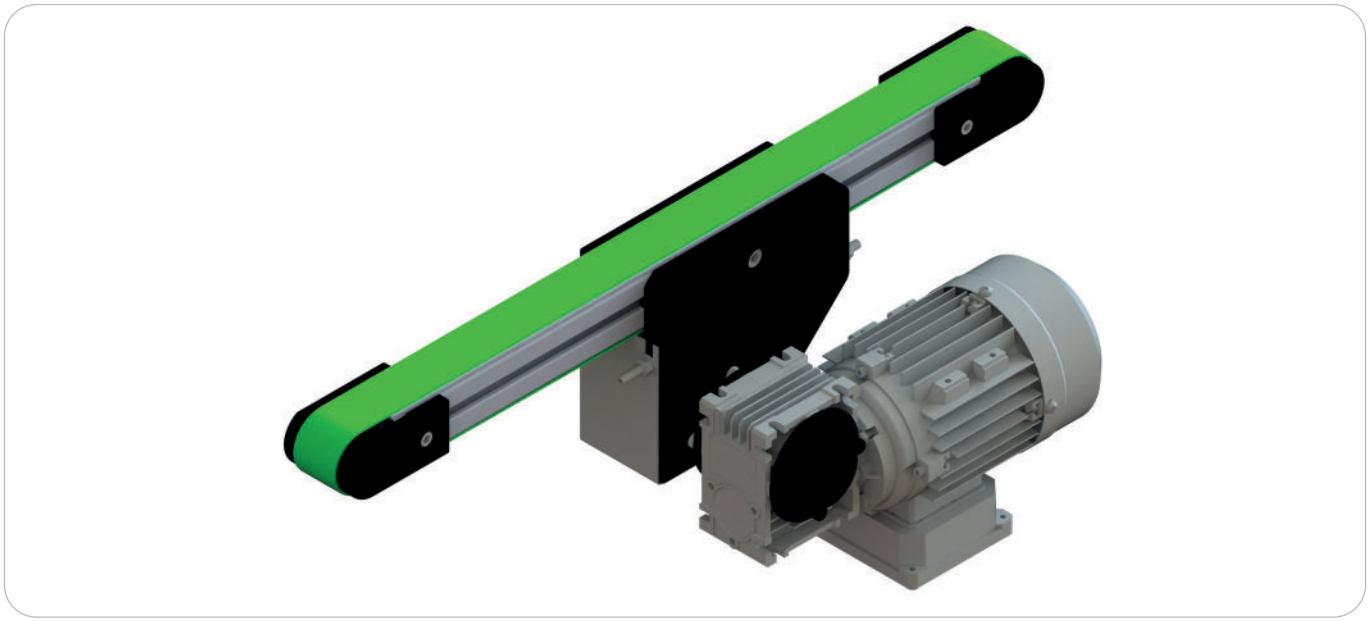

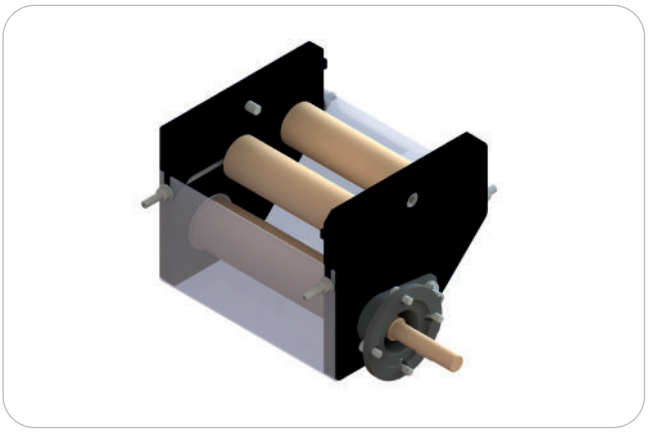

Gear motors positions (see page 106)

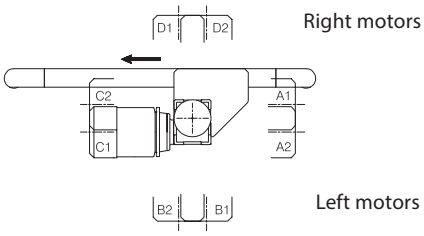

Product description/Dimensions	Order unit	Reference
Conveyor 40 Flat belt Central drive	**1 pce**	**C XXX 10 000**

(XXX = Width A of conveyor eg: C 040 10 000)

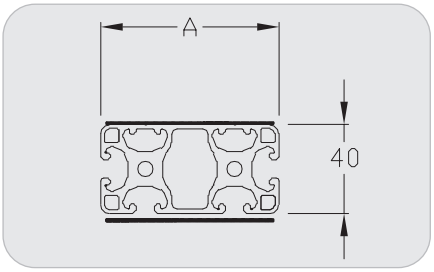

Conveyor 40

Flat belt
End drive
Widths 40, 80, 120, 160, 200, 250, 300, 400 mm

Technical data

Compact conveyor on profiles 8 basis 40 mm, for all kinds of components. Particularly well adapted to the use of cleated belts.

- x Drive on extremity drive pulley
- x Steel pulleys with ball bearings
- x Stainless steel plate from 200 to 400, otherwise on option

Dimensions (mm)

- x Width A: 40 - 80 - 120 - 160 - 200 - 250 - 300 - 400
- x Length L: 400 to 6 000
- x Width of belt: A-5
- x Length of belt: Lc= (2xL) + 132
- x Length hors-tout :
  Lh = L + 42 + 2 x ép. bande + tension
- x Length of profile: LP= L-52,5

Gear motors

- x 230 V single-phase and 230/400 V three-phase
  Speed (m/min) +/- 10 %:
  2 - 3 - 6 - 9 - 12 - 18 - 24
- x 24 Vcc on request

Gear motors data: Page 106

Belts

Recommended installation tension:
0,5 % maxi

Belt data: Page 104

Permissible loads: see loads data page 11.

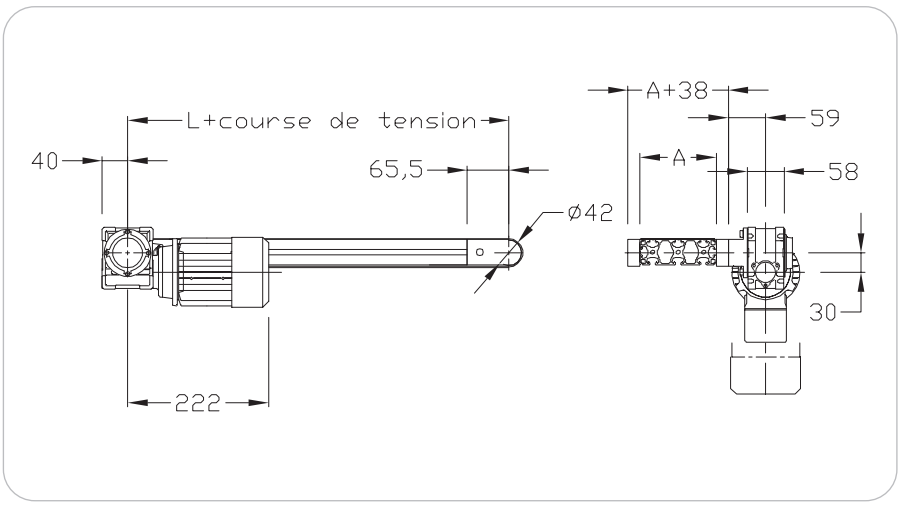

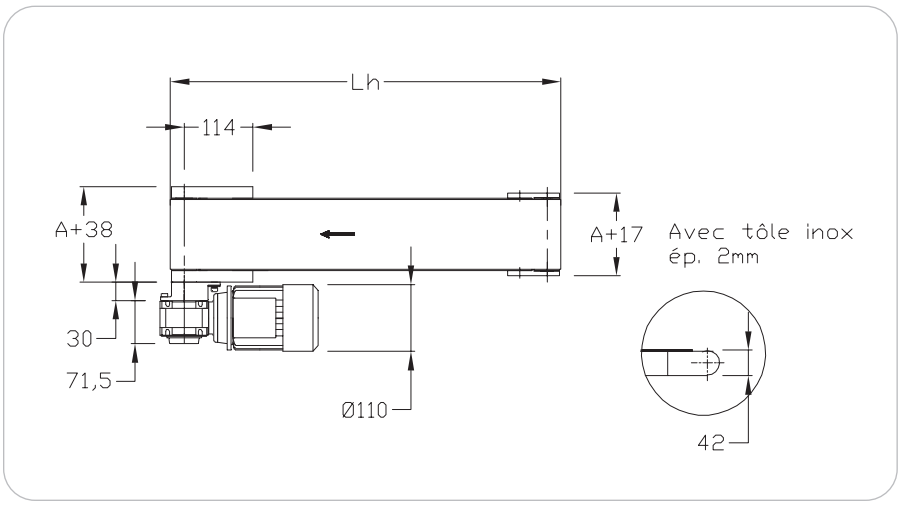

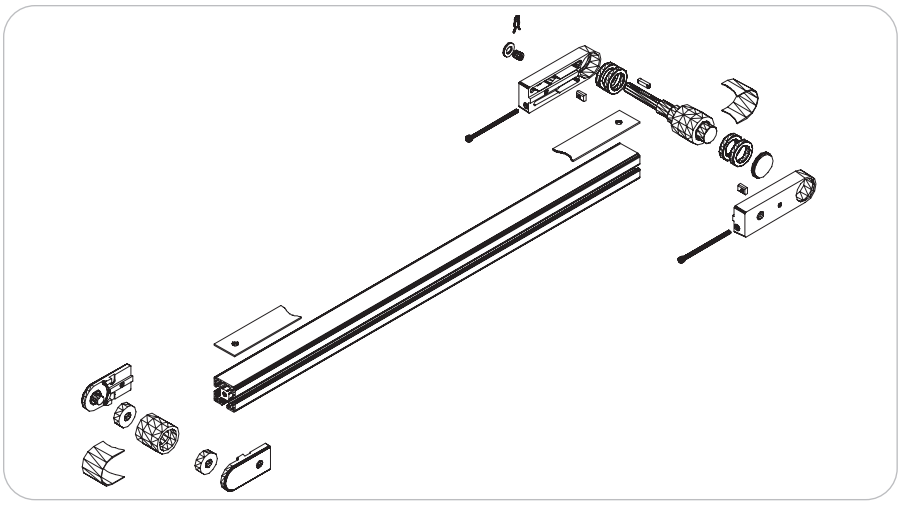

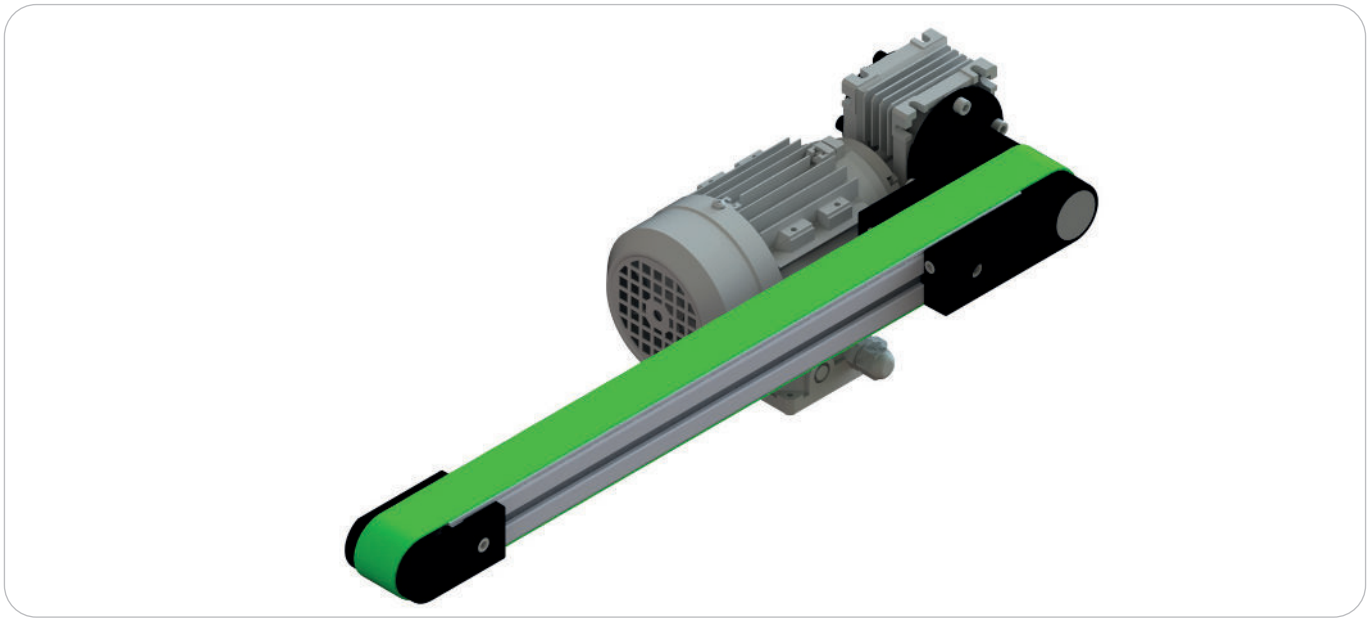

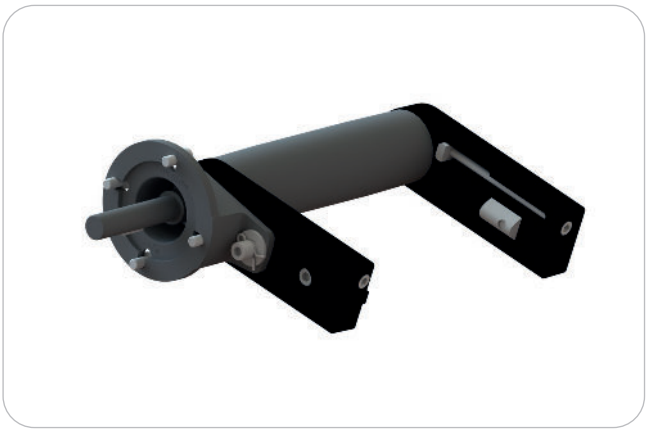

Gear motors positions (see page 106)

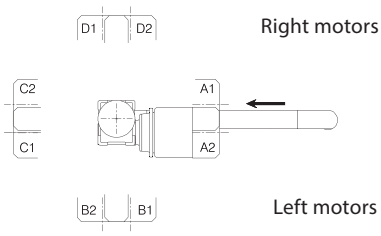

Product description/Dimensions	Order unit	Reference
Conveyor 40 Flat belt End drive	1 pce	C XXX 50 000

(XXX = Width A of conveyor eg: C 040 50 000)

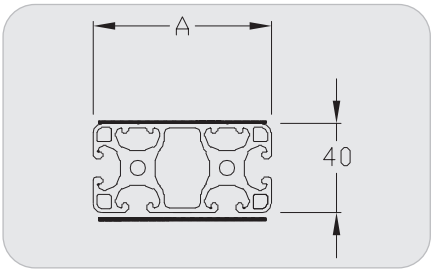

Conveyor 40

Flat belt
End drive, motor below
Widths 40, 80, 120, 160, 200, 250, 300, 400 mm

Technical data

Compact conveyor on profiles 8 basis 40 mm, for all kinds of components. Positioned below, the motor facilitates the integration.

- x Drive of the extremity pulley with timing belt 5 mm step width 32mm
- x Steel pulleys with ball bearings
- x Stainless steel plate from 200 to 400, otherwise on option

Dimensions (mm)

- x Width A: 40 - 80 - 120 - 160 - 200 - 250 - 300 - 400
- x Length L: 400 to 6 000
- x Width of belt: A-5
- x Length of belt: Lc= (2xL) + 132
- x Length hors tout :
  Lh = L + 42 + 2 ép. bande + tension
- x Length of profile: LP= L-52,5

Gear motors

- x 230 V single-phase and 230/400 V three-phase
  Speed (m/min) +/- 10 %:
  2 - 3 - 6 - 9 - 12 - 18 - 24
- x 24 Vcc on request

Gear motors data: Page 106

Belts

Installation tension: 0,5 % maxi

Belt data: Page 104

Permissible loads: see loads data page 11.

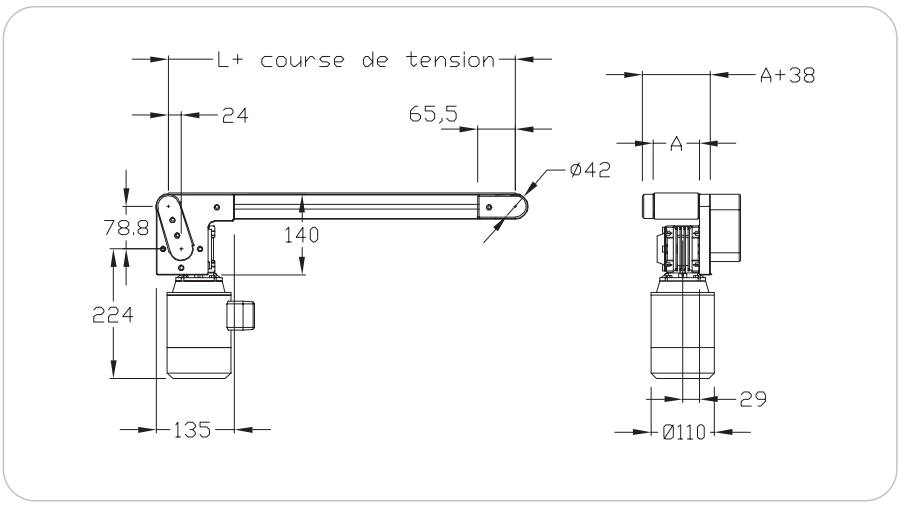

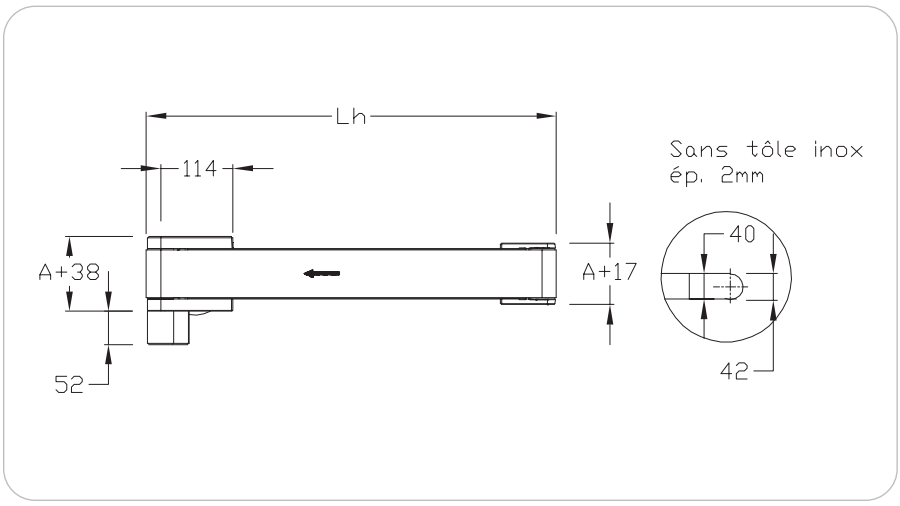

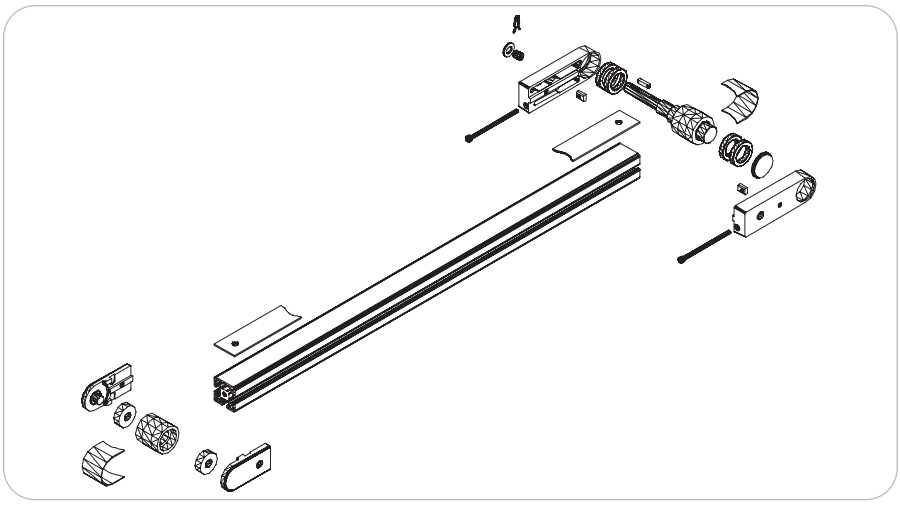

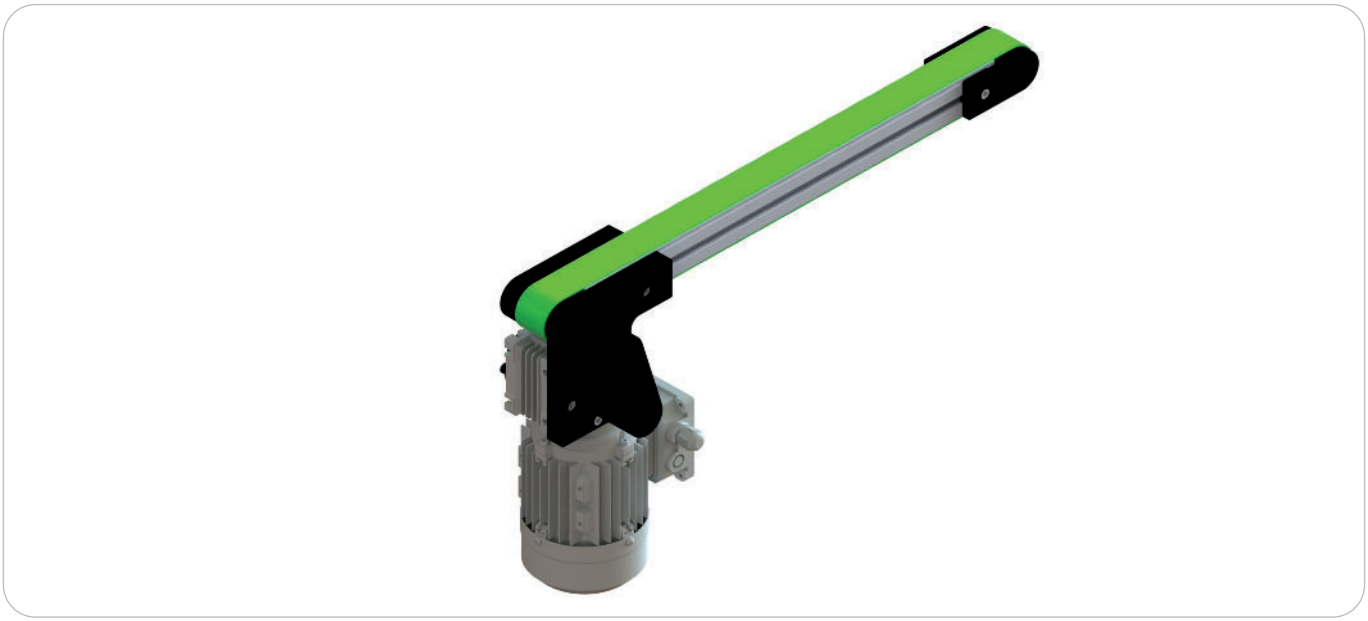

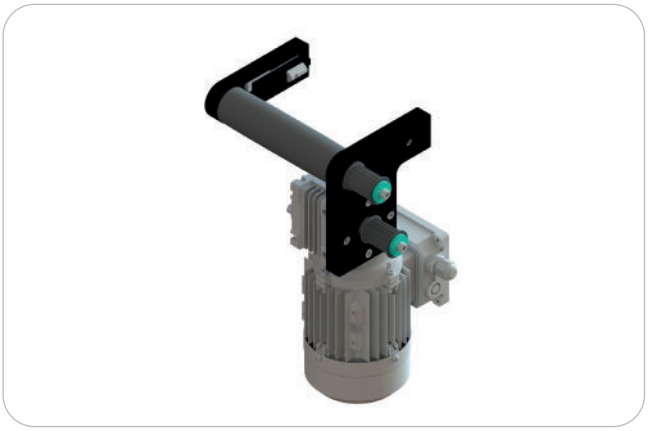

Gear motors positions (see page 106)

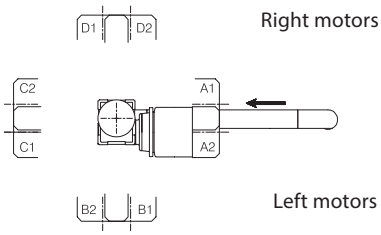

Product description/Dimensions	Order unit	Reference
Conveyor 40 Flat belt End drive Motor below Right	1 pce	C XXX 53 000D
Conveyor 40 Flat belt End drive Motor below Left	1 pce	C XXX 53 000G
Conveyor 40 Flat belt End drive Motor below Steel Right	1 pce	C XXX 53 000ID
Conveyor 40 Flat belt End drive Motor below Steel Left	1 pce	C XXX 53 000IG

(XXX = Width A of conveyor eg: C 040 53 000)

CONVEYOR 40 DOUBLE FLAT BELT

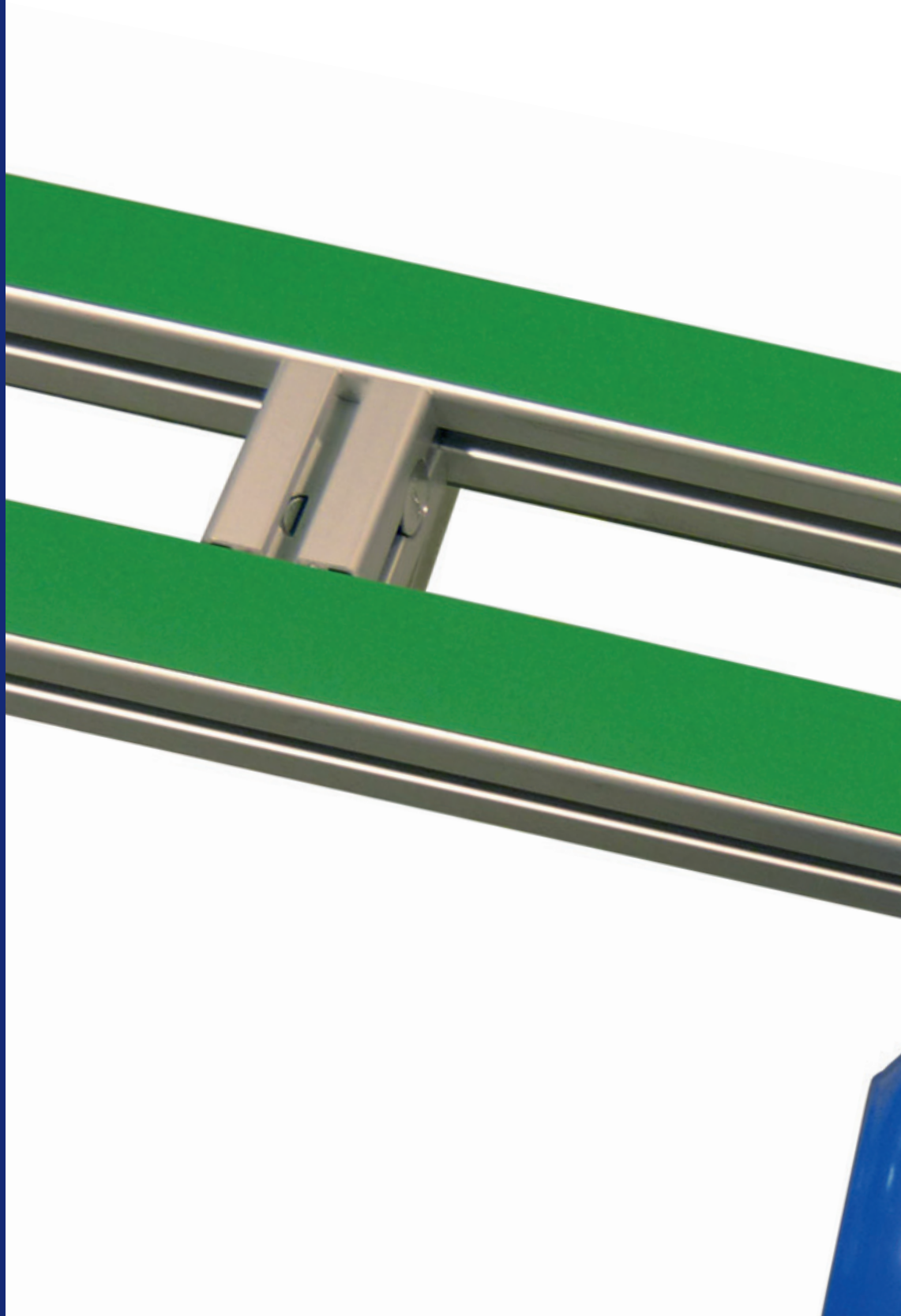

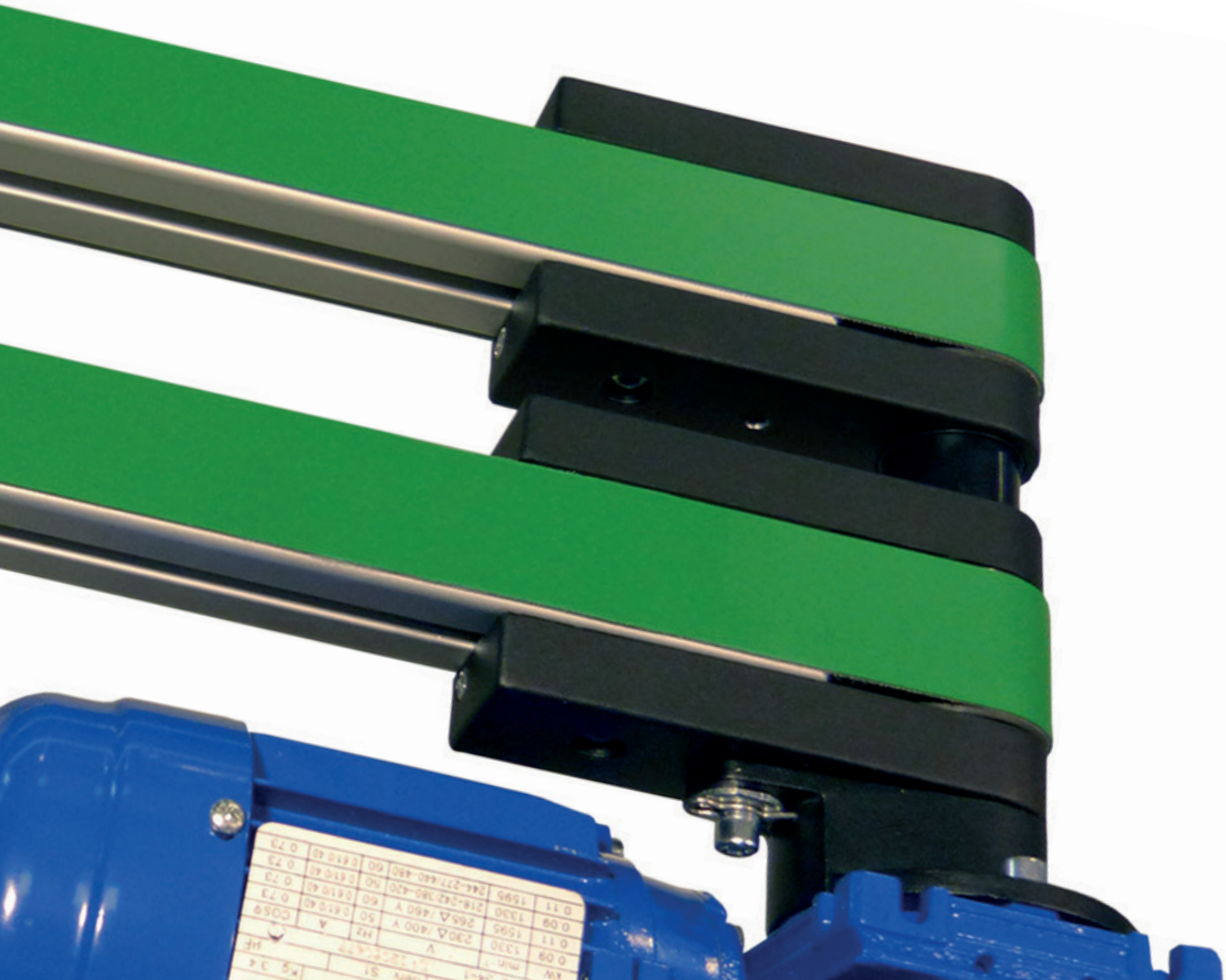

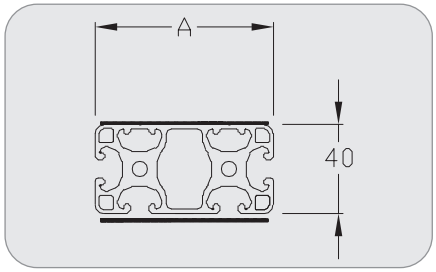

Conveyor 40

Double flat belt
Central drive, external motor
Widths 40, 80 mm

Technical data

Two parallel flat belt conveyors driven by only one motor, for large components. Two belts enable the use of free space.

- x Adjustable position of the drive along the profile
- x Distance between the two conveyors adaptable on request
- x Stainless steel plate on option

Dimensions (mm)

- x Width A: 40 - 80
- x Length L: 400 to 6 000
- x Width of belt: A-5
- x Length of belt:
  Lc= (2xL+375) x 0,992
- x Length of profile: LP= L-50
- x Center distance mini:
  Width 40: 92
  Width 80: 132
- x Center distance maxi:
  Width 40: 840
  Width 80: 800

Gear motors

- x 230 V single-phase and 230/400 V three-phase
  Speed (m/min) +/- 10 %:
  2 - 3 - 6 - 9 - 12 - 18 - 24
- x 24 Vcc on request

Gear motors data: Page 106

Belts

Installation tension: 0,5 % maxi

Belt data: Page 104

Permissible loads: see loads data page 11.

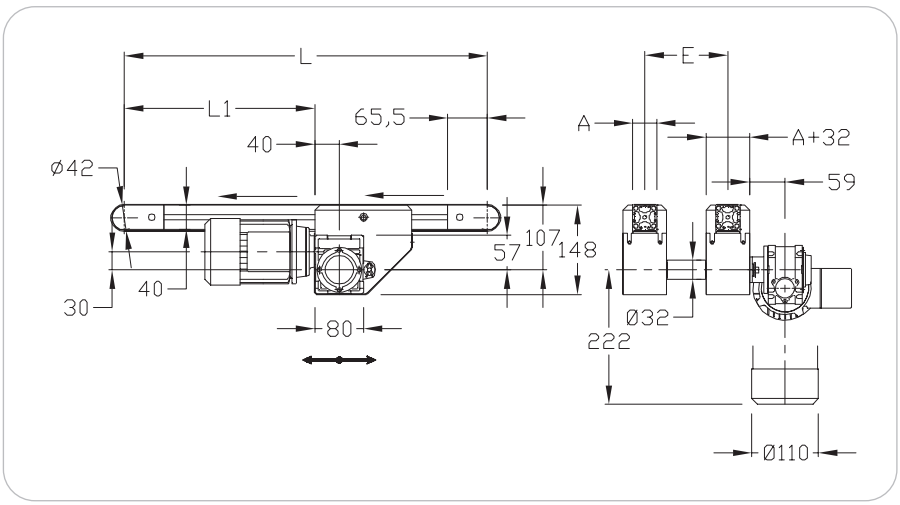

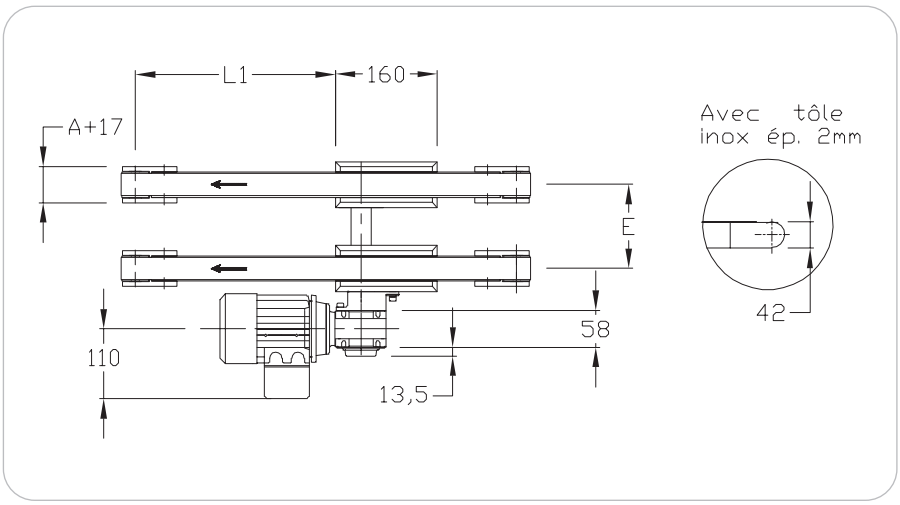

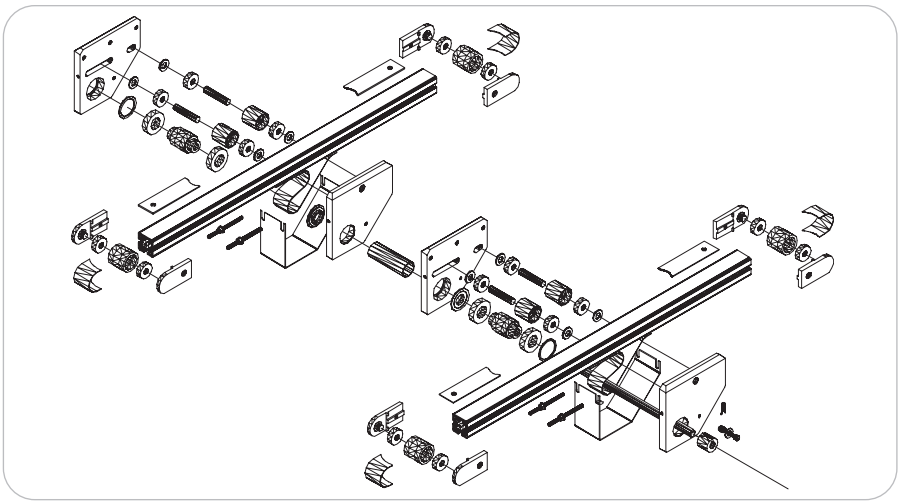

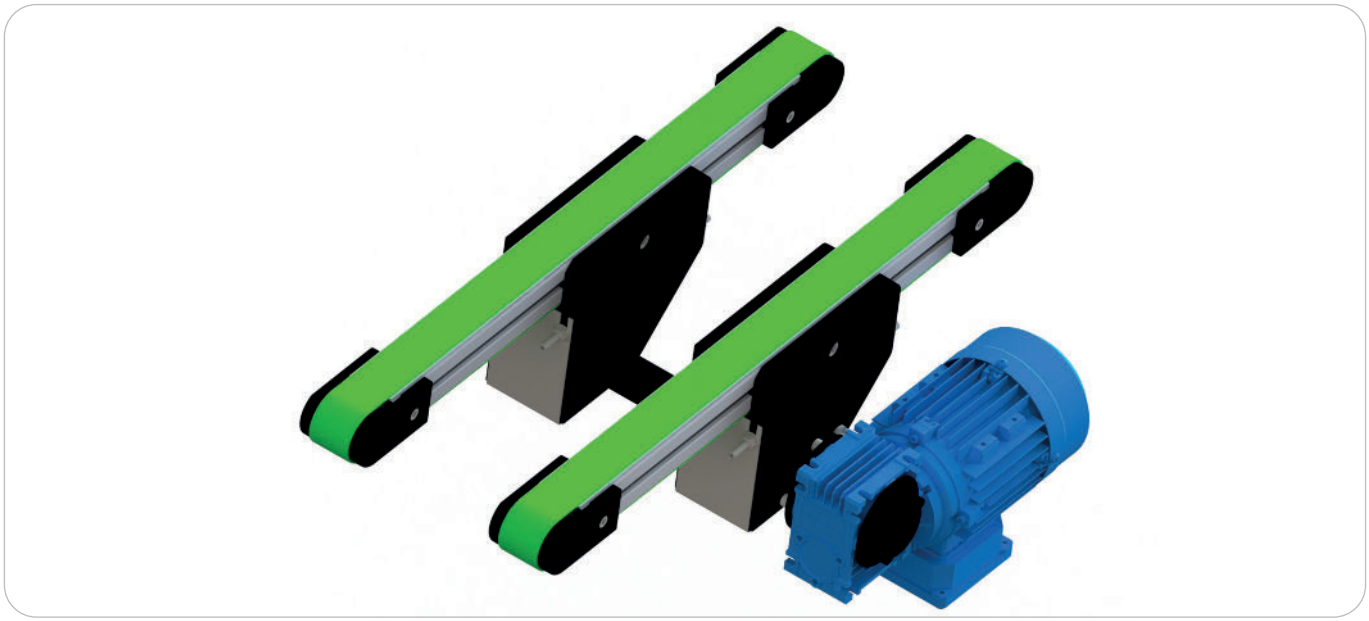

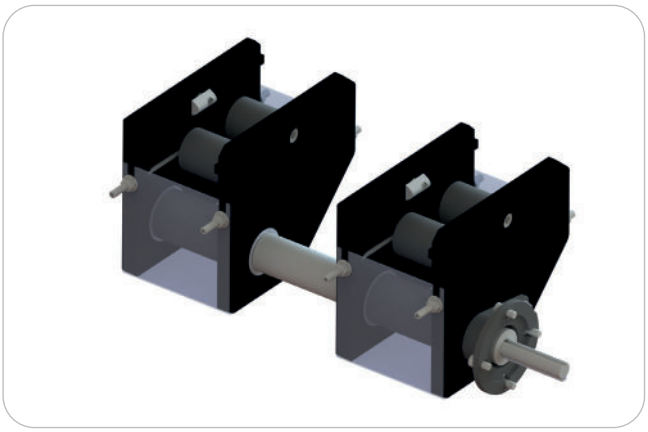

Gear motors positions (see page 106)

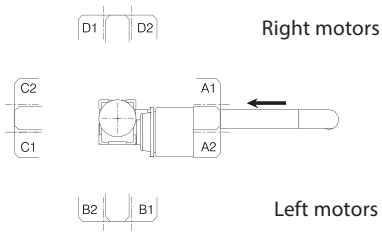

Product description/Dimensions	Order unit	Reference
Conveyor 40 Double flat belt Central drive External motor 40 mm	1 pce	C 040 20 000
Conveyor 40 Double flat belt Central drive External motor 80 mm	1 pce	C 080 20 000

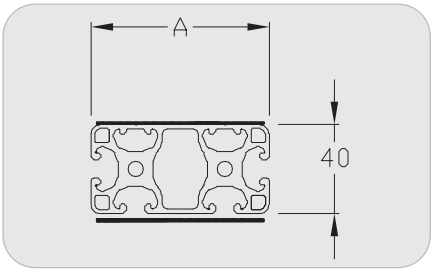

Conveyor 40

Double flat belt
Central drive, internal motor
Widths 40, 80 mm

Technical data

Two parallel flat belt conveyors driven by only one motor, for large components.
Two belts enable the use of free space.
The internal mounting of the motor facilitates the integration.

- x Adjustable position of the drive along the profile
- x Distance between the 2 conveyors adaptable on request
- x Stainless steel plate on option

Dimensions (mm)

- x Width A: 40 - 80
- x Length L: 400 to 6 000
- x Spacing between belts
  E = 72 to 800
- x Width of belt: A-5
- x Length of belt:
  Lc= (2xL+375) x 0,992
- x Length of profile: LP= L-50
- x Center distance mini:
  Width 40: 190
  Width 80: 230
- x Center distance maxi:
  Width 40: 928
  Width 80: 888

Gear motors

- x 230 V single-phase and 230/400 V three-phase
  Speed (m/min) +/- 10 %:
  2 - 3 - 6 - 9 - 12 - 18 - 24
- x 24 Vcc on request

Gear motors data: Page 106

Belts

Installation tension: 0,5 % maxi
Belt data: Page 104

Permissible loads: see loads data page 11.

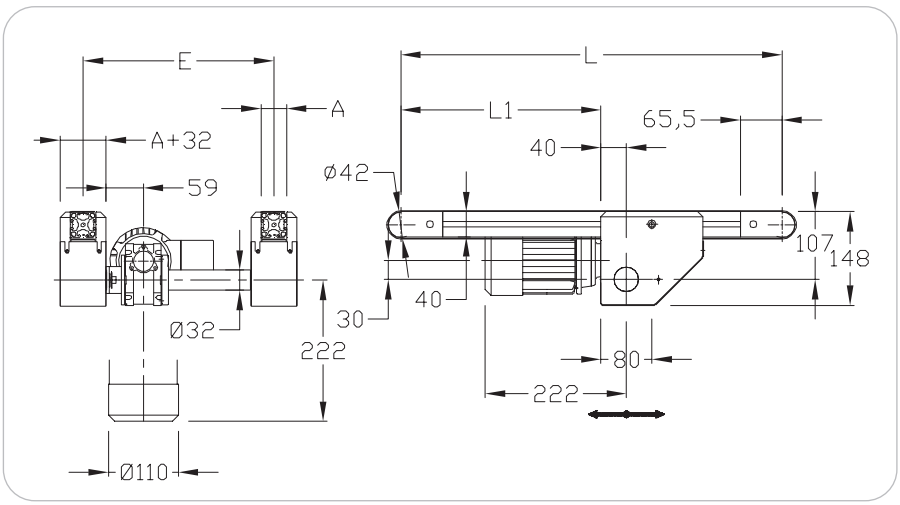

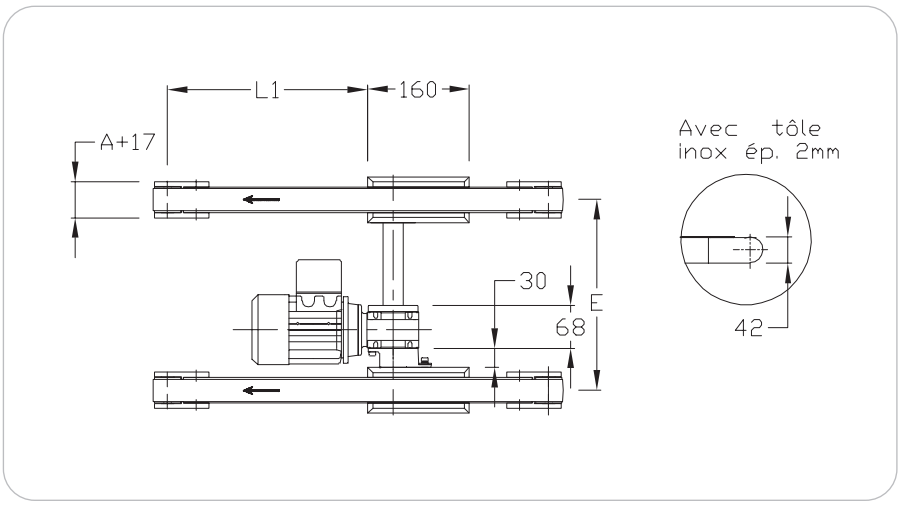

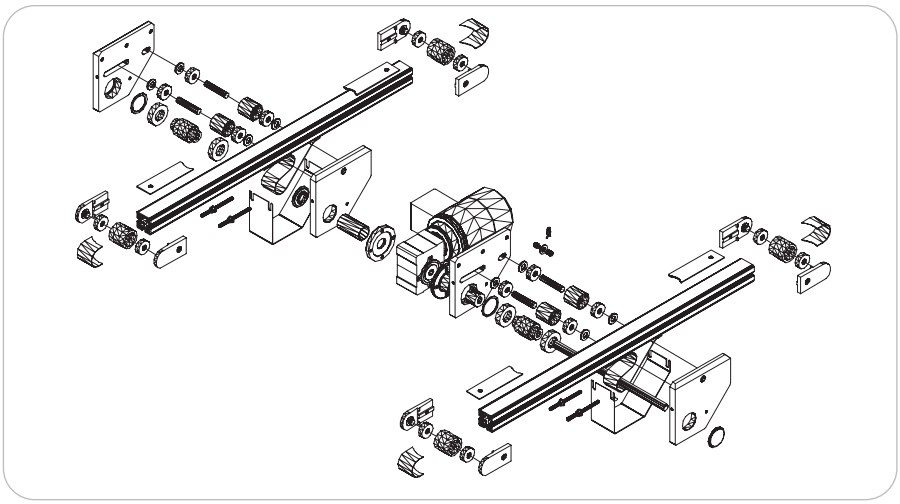

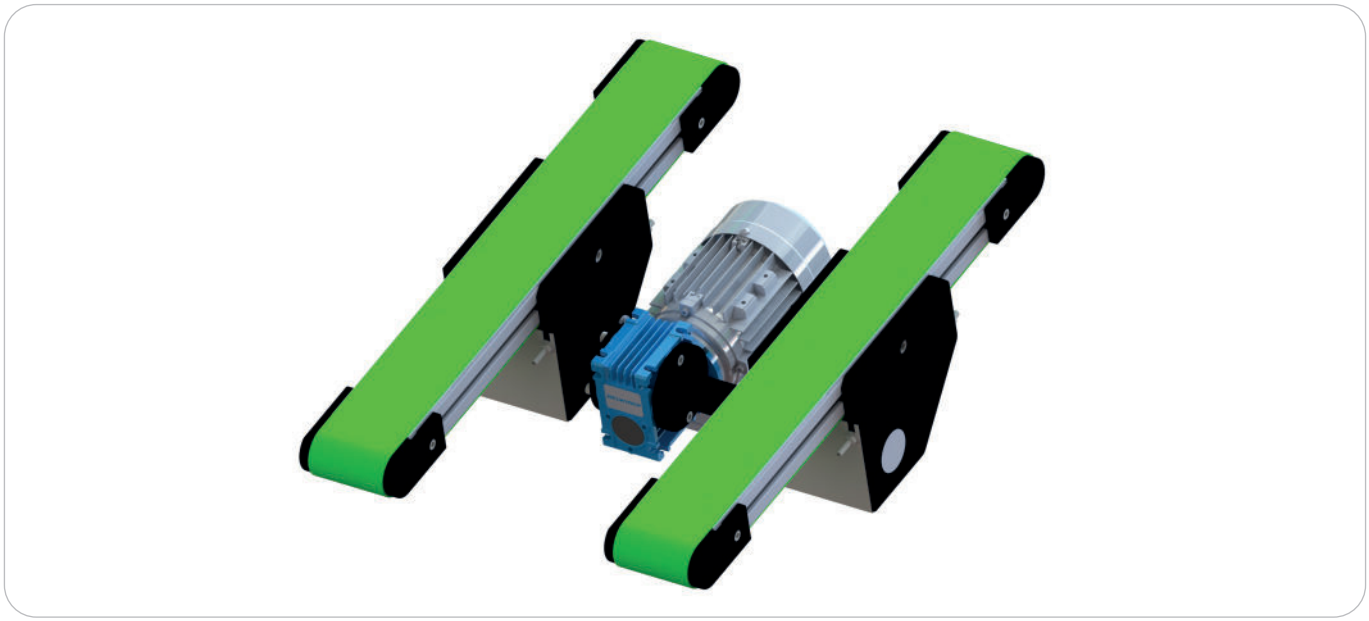

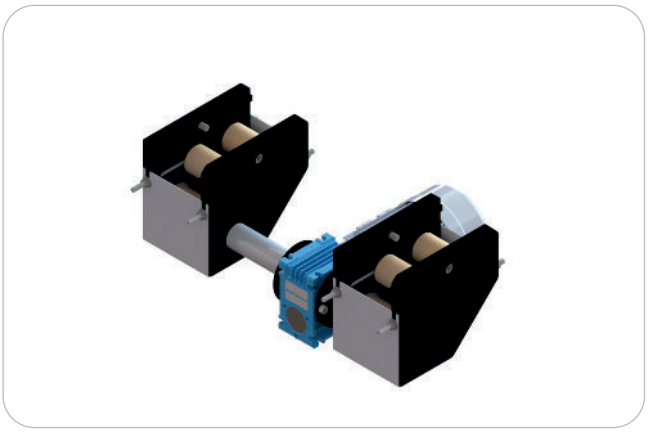

Gear motors positions (see page 106)

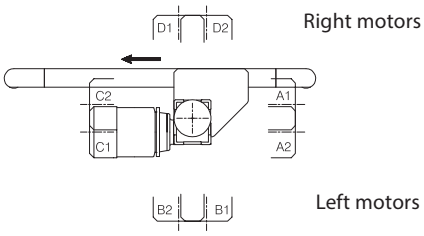

Product description/Dimensions	Order unit	Reference
Conveyor 40 Double flat belt Central drive Internal motor 40 mm	1 pce	C 040 23 000
Conveyor 40 Double flat belt Central drive Internal motor 80 mm	1 pce	C 080 23 000

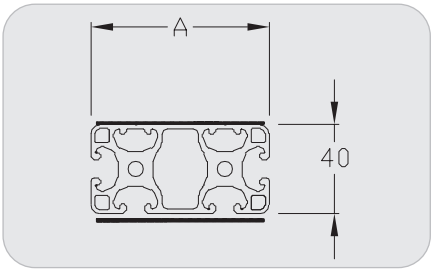

Conveyor 40

Double flat belt
End drive
Widths 40, 80 mm

Technical data

Two parallel flat belt conveyors driven by only one motor, for large components. Two belts enable the use of free space. The internal mounting of the motor facilitates the integration.

- x Drive on extremity drive pulley
- x Steel pulleys with ball bearings
- x Stainless steel plate on option

Dimensions (mm)

- x Width A: 40 - 80
- x Length L: 400 to 6 000
- x Spacing between belts
  E = 72 to 800
- x Width of belt: A-5
- x Length of belt:
  Lc= (2xL) + 132
- x Length of profile: LP= L-52,5
- x Center distance mini:
  Width 40: 98
  Width 80: 138
- x Center distance maxi:
  Width 40: 834
  Width 80: 794

Gear motors

- x 230 V single-phase and 230/400 V three-phase
  Speed (m/min) +/- 10 %:
  2 - 3 - 6 - 9 - 12 - 18 - 24
- x 24 Vcc on request

Gear motors data: Page 106

Belts

Installation tension: 0,5 % maxi

Belt data: Page 104

Permissible loads: see loads data page 11.

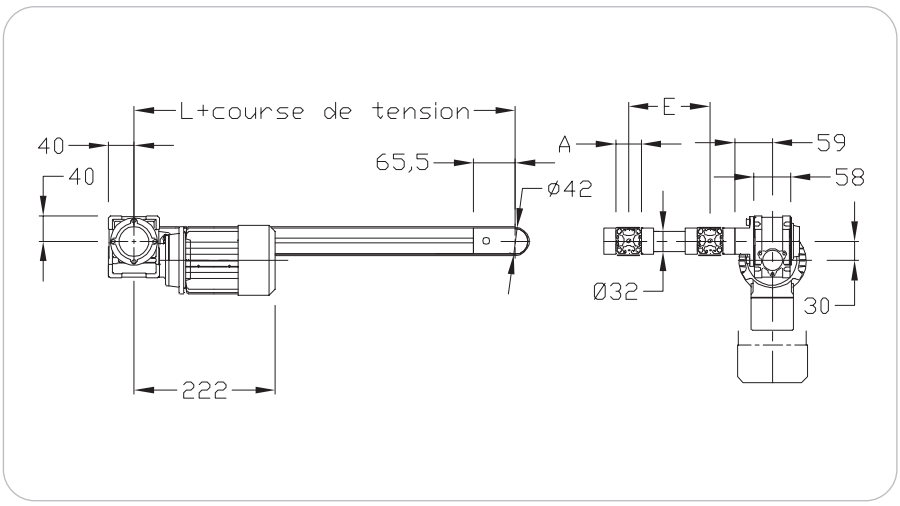

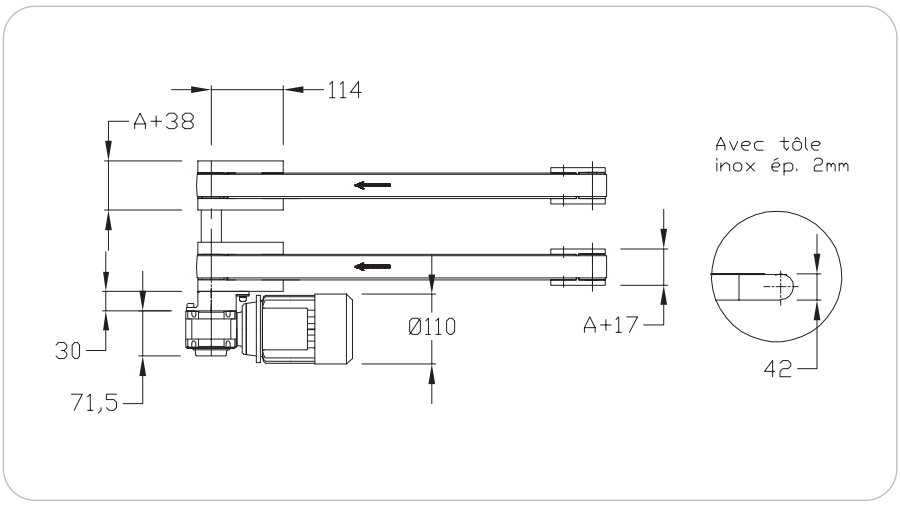

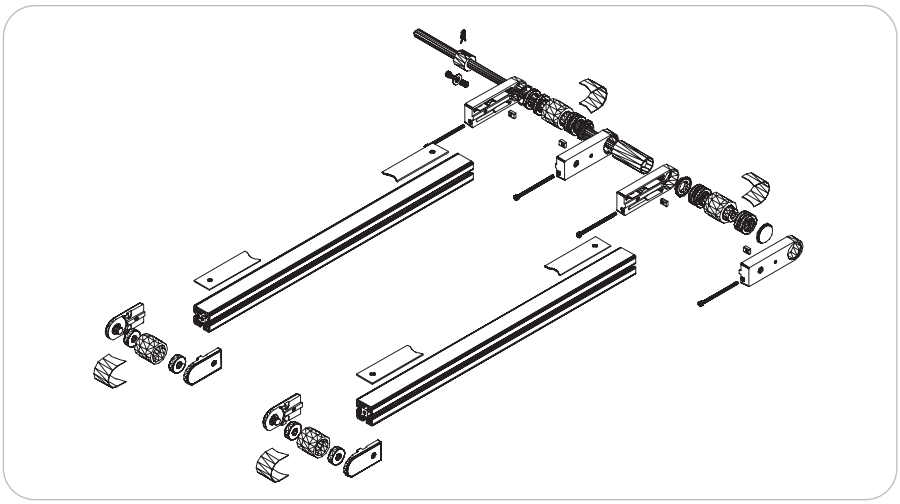

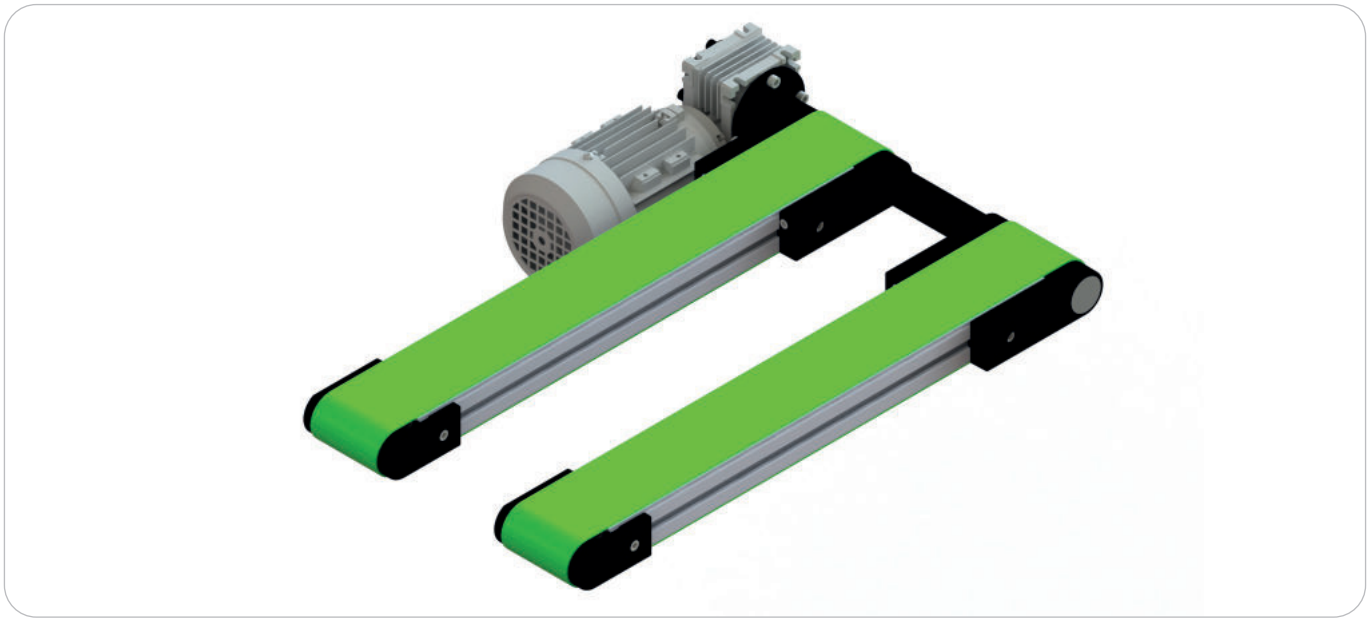

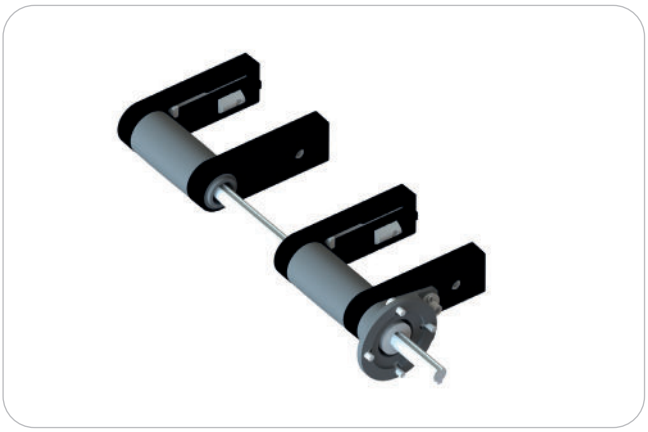

Gear motors positions (see page 106)

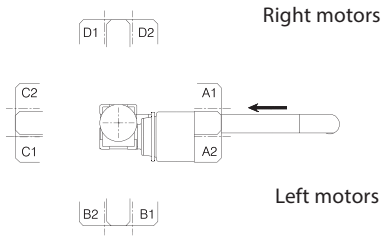

Product description/Dimensions	Order unit	Reference
Conveyor 40 Double flat belt End drive 40 mm	1 pce	C 040 40 000
Conveyor 40 Double flat belt End drive 80 mm	1 pce	C 080 40 000

CONVEYOR 40 TIMING BELT

C 000 50 006

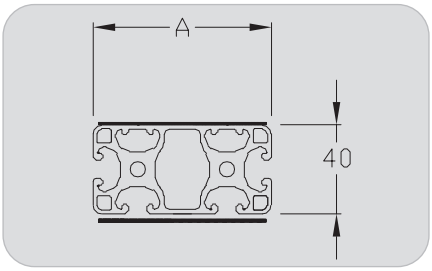

Conveyor 40

Timing belt (CC)
Central drive
Widths 40, 80 mm

Technical data

Compact conveyor on profiles 8 basis 40 mm, for all kinds of components.
Positive driving belt for heavy loads.

- x Adjustable position of the drive along the profile
- x Pulleys with ball bearings
- x Guiding belt PA material
- x Timing belt, 5 mm step

Dimensions (mm)

- x Width A: 40 - 80
- x Length L: 400 to 6 000
- x Width of belt: 32 and 72 mm
- x Length of belt:
  Lc= (2xL+368) x 0,999
- x Length of profile: LP= L-51

Gear motors

- x 230 V single-phase and 230/400 V three-phase
  Speed (m/min) +/- 10 %:
  2 - 3 - 6 - 9 - 12 - 18 - 24
- x 24 Vcc on request

Gear motors data: Page 106

Belts

Installation tension: 0,1 %

Belt data: Page 104

Permissible loads: see loads data page 11.

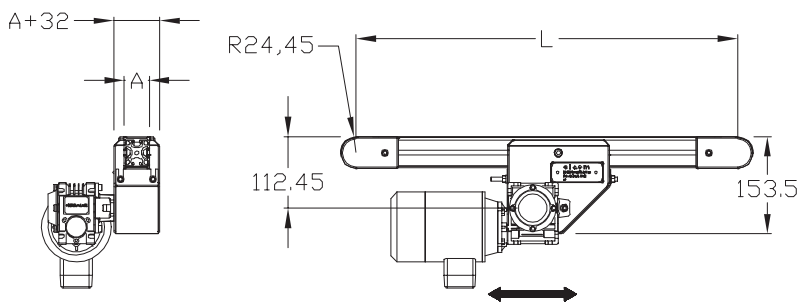

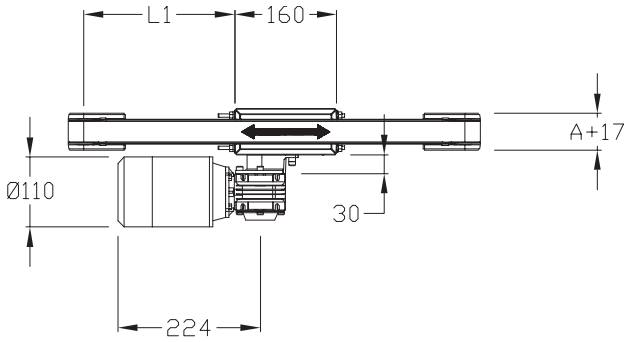

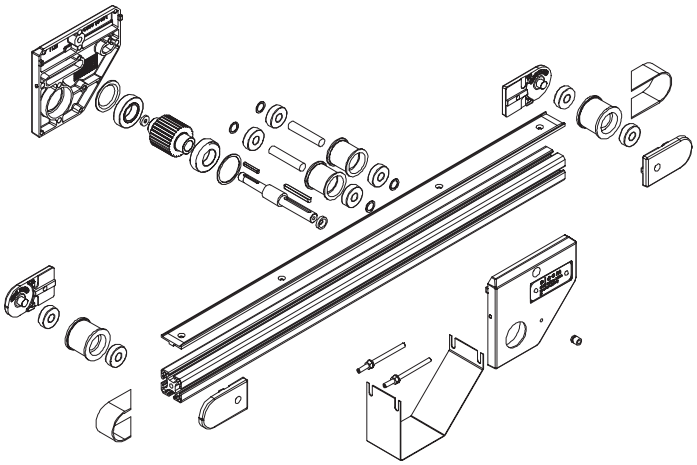

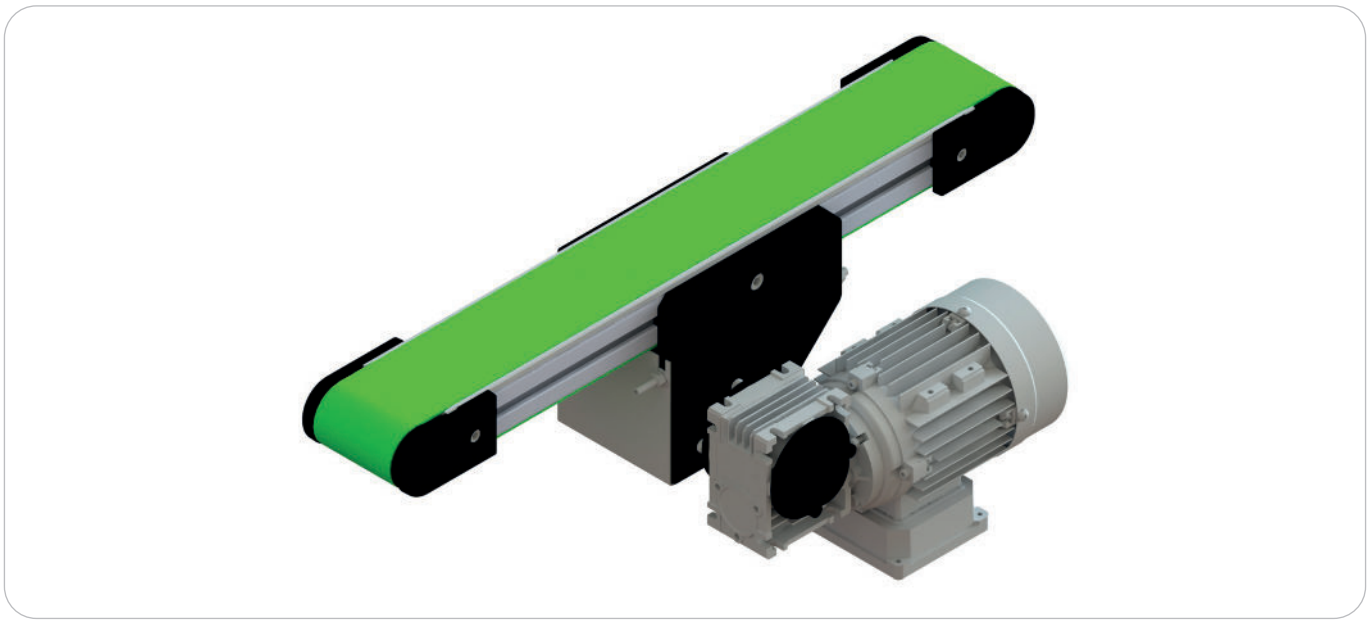

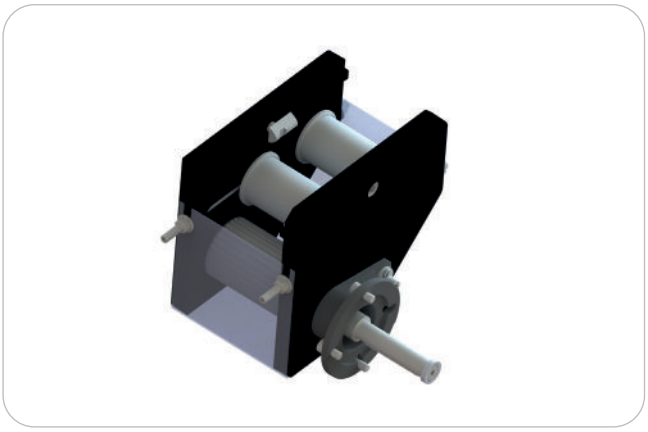

Gear motors positions (see page 106)

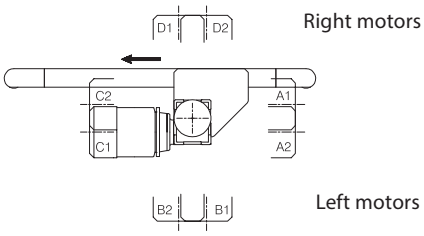

Product description/Dimensions	Order unit	Reference
Conveyor 40 CC Timing belt Central drive 40 mm	1 pce	C 040 11 000
Conveyor 40 CC Timing belt Central drive 80 mm	1 pce	C 080 11 000

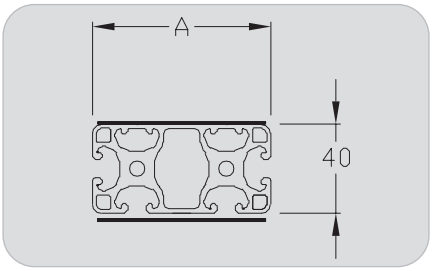

Conveyor 40

Timing belt (CC)
End drive
Widths 40, 80 mm

Technical data

Compact conveyor on profiles 8 basis 40 mm, for all kinds of components.
Positive driving belt for heavy loads.

- x Pulleys with ball bearings
- x Guiding belt PA material
- x Timing belt, 5 mm step

Dimensions (mm)

- x Width A: 40 - 80
- x Length L: 400 to 6 000
- x Width of belt: 32 and 72 mm
- x Length of belt:
  Lc= (2xL+152) x 0,999
- x Length of profile: LP= L-68,5

Gear motors

- x 230 V single-phase and 230/400 V three-phase
  Speed (m/min) +/- 10 %:
  2 - 3 - 6 - 9 - 12 - 18 - 24
- x 24 Vcc on request

Gear motors data: Page 106

Belts

Installation tension: 0,1 %

Belt data: Page 104

Permissible loads: see loads data page 11.

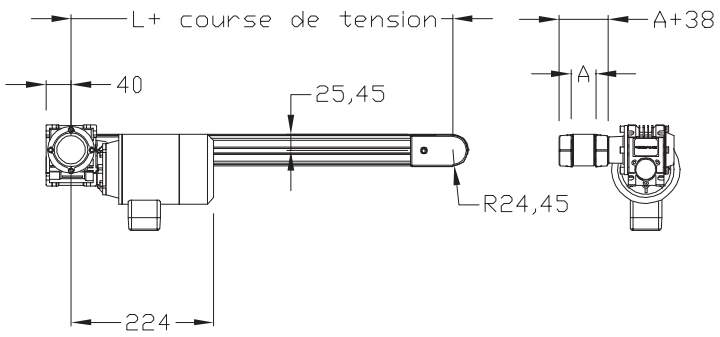

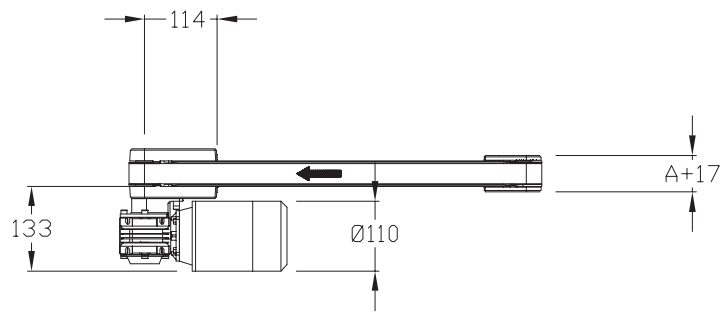

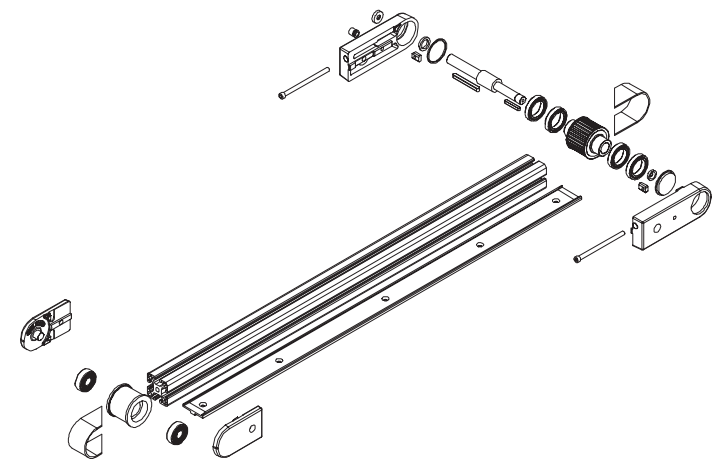

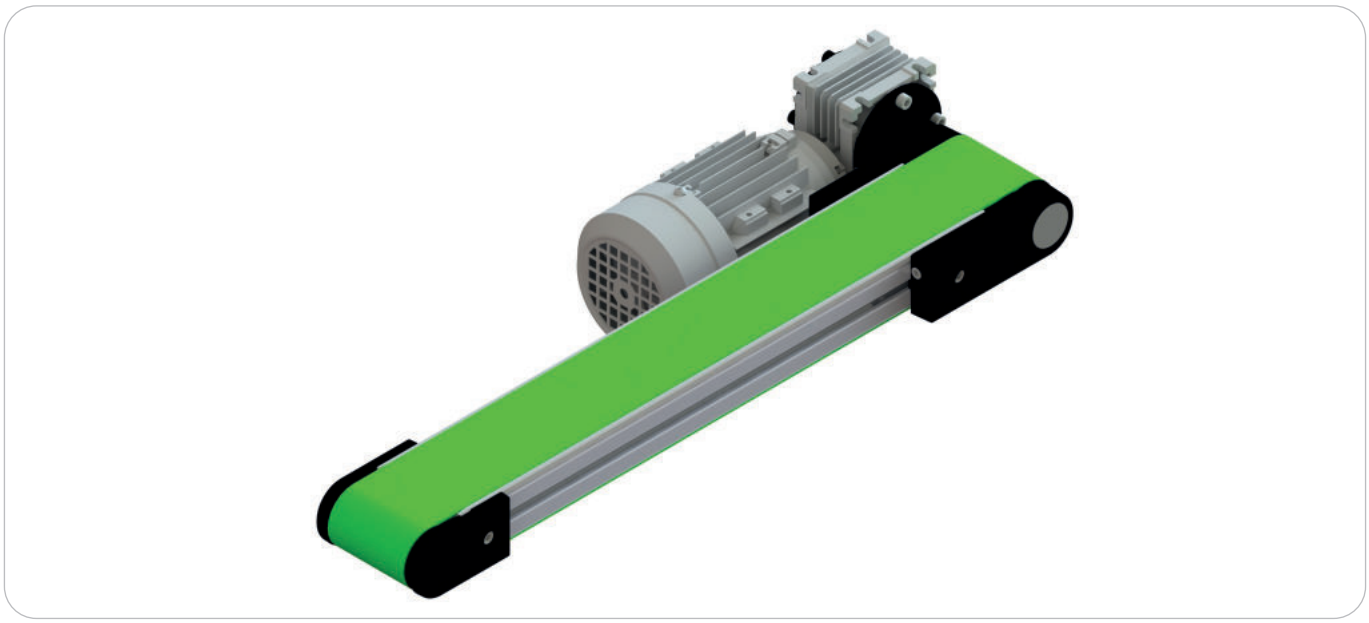

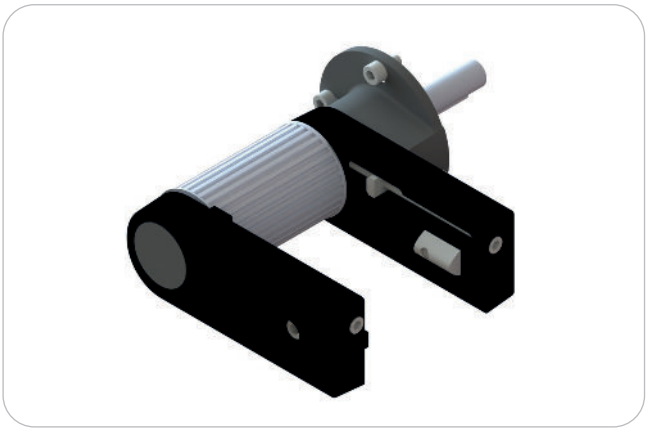

Gear motors positions (see page 106)

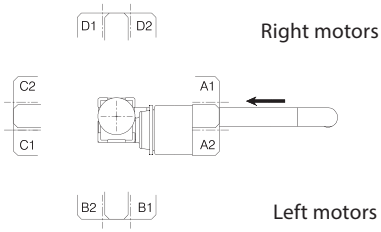

Product description/Dimensions	Order unit	Reference
Conveyor 40 CC Timing belt End drive 40 mm	1 pce	C 040 51 000
Conveyor 40 CC Timing belt End drive 80 mm	1 pce	C 080 51 000

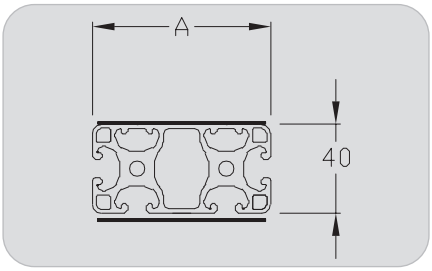

Conveyor 40

Timing belt (CC)
End drive, Motor below
Widths 40, 80 mm

Technical data

Compact conveyor on profiles 8 basis 40 mm, for all kinds of components. Entraînement positif de la courroie pour charges importantes. Le motor below facilite l'intégration.

- Entraînement de la poulie crantée d'extrémité par timing belt au pas de 5 mm width 32 mm
- Poulies montées sur roulements to billes
- Guide bande en PA
- Timing belt au pas de 5 mm

Dimensions (mm)

- Width A: 40 - 80
- Length L: 400 to 6 000
- Width of belt: 32 and 72 mm
- Length of belt:
  Lc= (2xL+152) x 0,999
- Length of profile: LP= L-68,5

Gear motors

- 230 V single-phase and 230/400 V three-phase
  Speed (m/min) +/- 10 %:
  2 - 3 - 6 - 9 - 12 - 18 - 24
- 24 Vcc on request

Gear motors data: Page 106

Belts

Installation tension: 0,1 %

Belt data: Page 104

Permissible loads: see loads data page 11.

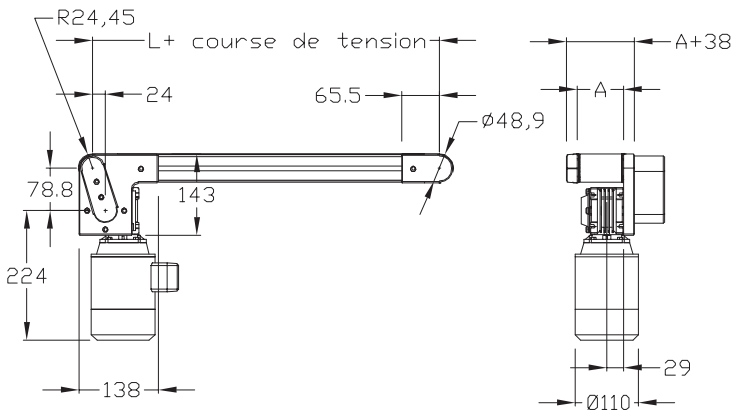

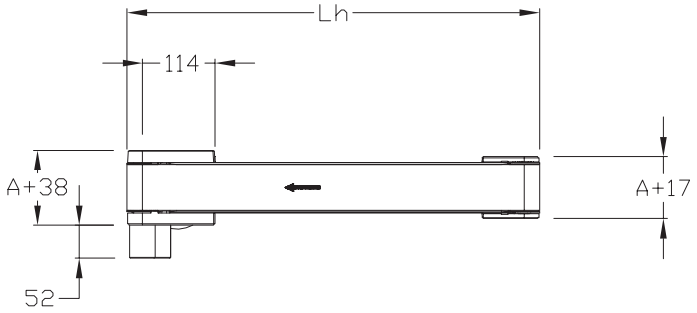

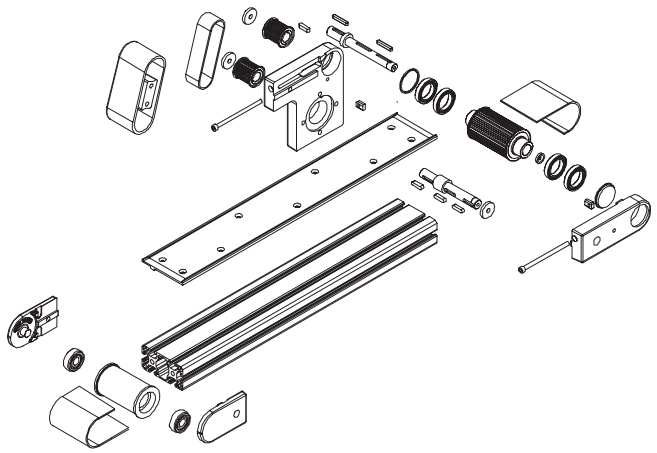

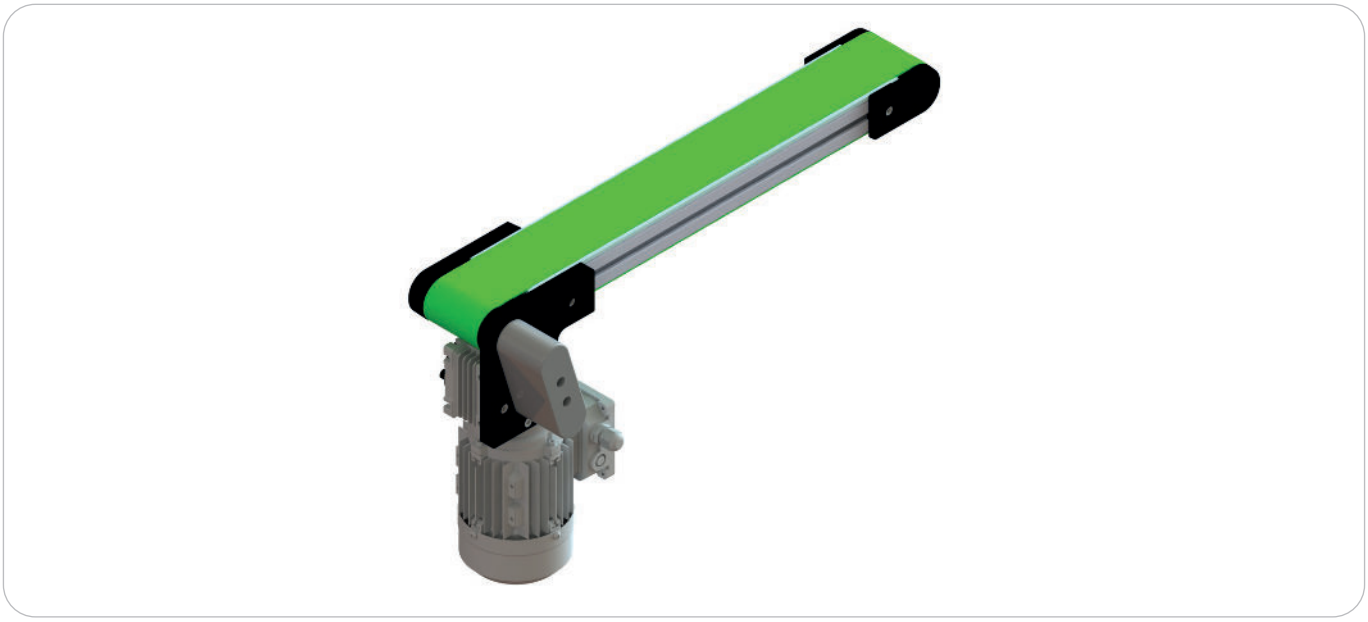

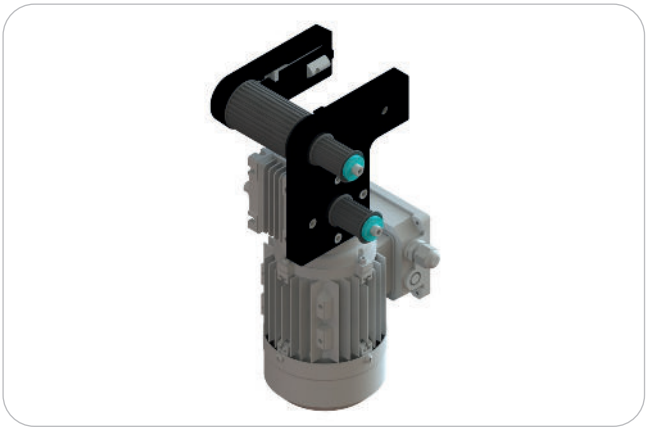

Gear motors positions (see page 106)

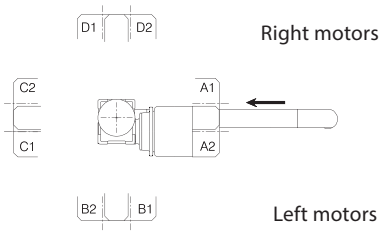

Product description/Dimensions	Order unit	Reference
Conveyor 40 CC Timing belt End drive Motor below 40 mm Right	1 pce	C 040 54 000D
Conveyor 40 CC Timing belt End drive Motor below 40 mm Left	1 pce	C 040 54 000G
Conveyor 40 CC Timing belt End drive Motor below 80 mm Right	1 pce	C 080 54 000D
Conveyor 40 CC Timing belt End drive Motor below 80 mm Left	1 pce	C 080 54 000G

CONVEYOR 40 DOUBLE TIMING BELT

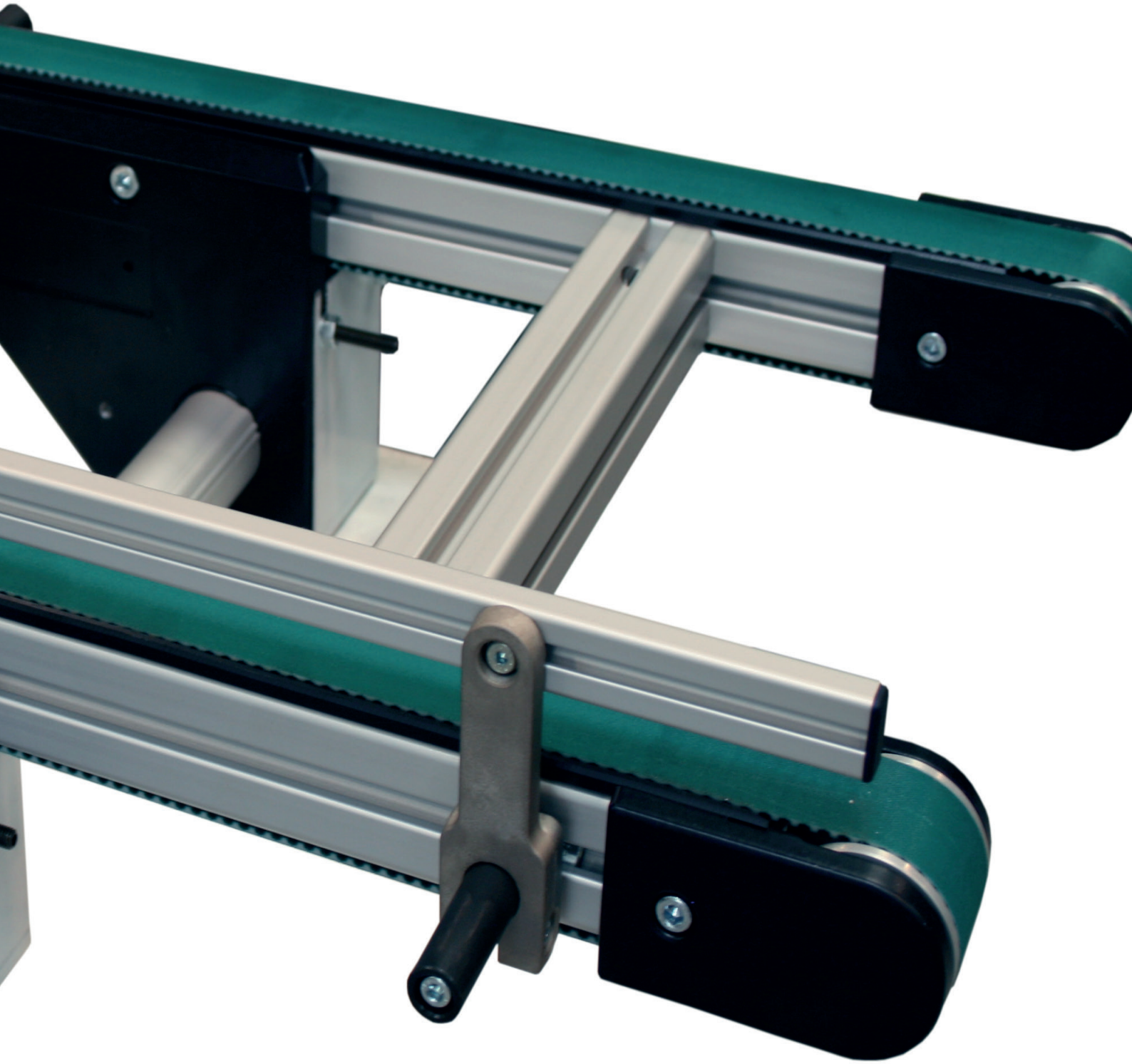

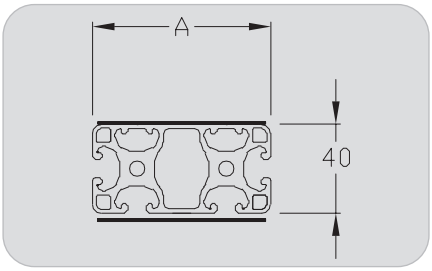

Conveyor 40

Double timing belt (CC)
Central drive, external motor
Widths 40, 80 mm

Technical data

Two parallel flat belt conveyors driven by only one motor, for large components.
Two belts enable the use of free space.
Positive driving belt for heavy loads.
Synchronization of the 2 belts

- x Adjustable position of the drive along the profile
- x Pulleys with ball bearings
- x Guiding belt PA material
- x Timing belt, 5 mm step

Dimensions (mm)

- x Width A: 40 - 80
- x Length L: 400 to 6 000
- x Width of belt: 32 and 72 mm
- x Length of belt:
  Lc= (2xL+368) x 0,999
- x Length of profile: LP= L-51
- x Center distance mini:
  Width 40: 108
  Width 80: 148
- x Center distance maxi:
  Width 40: 1 000
  Width 80: 1 000

Gear motors

- x 230 V single-phase and 230/400 V three-phase
  Speed (m/min) +/- 10 %:
  2 - 3 - 6 - 9 - 12 - 18 - 24
- x 24 Vcc on request

Gear motors data: Page 106

Belts

Installation tension: 0,1 %

Belt data: Page 104

Permissible loads: see loads data page 11.

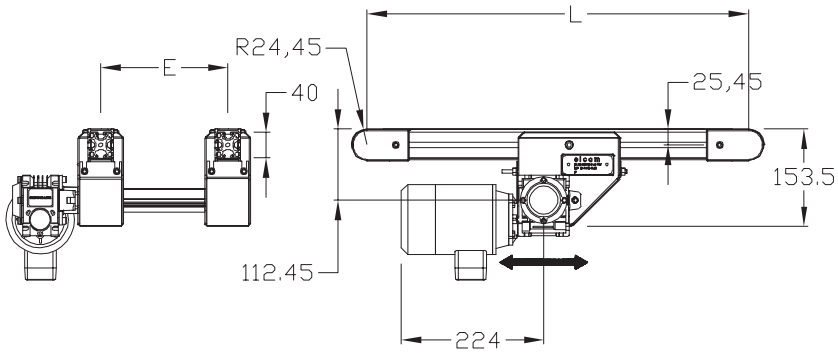

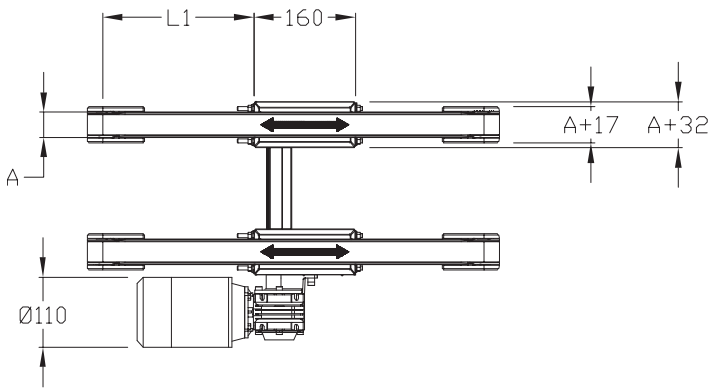

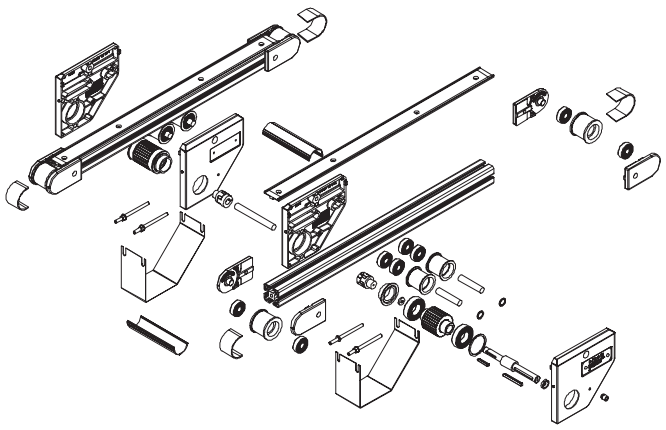

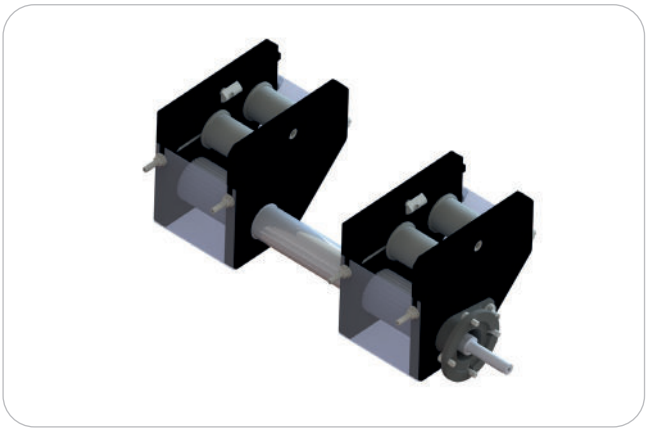

Gear motors positions (see page 106)

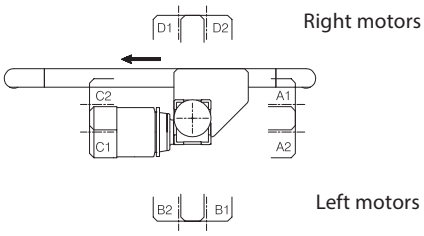

Product description/Dimensions	Order unit	Reference
Conveyor 40 Double timing belt Central drive External motor 40 mm	1 pce	C 040 21 000
Conveyor 40 Double timing belt Central drive External motor 80 mm	1 pce	C 080 21 000

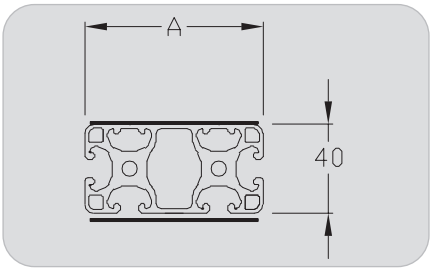

Conveyor 40

Double timing belt (CC)
Central drive, Internal motor
Widths 40, 80 mm

Technical data

Two parallel flat belt conveyors driven by only one motor, for large components.

Two belts enable the use of free space. The internal mounting of the motor facilitates the integration.

Positive driving belt for heavy loads.

Synchronization of the 2 belts.

- x Adjustable position of the drive along the profile
- x Pulleys with ball bearings
- x Guiding belt PA material
- x Timing belt, 5 mm step

Dimensions (mm)

- x Width A: 40 - 80
- x Length L: 400 to 6 000
- x Width of belt: 32 and 72 mm
- x Length of belt:
  Lc= (2xL+368) x 0,999
- x Length of profile: LP= L-51
- x Center distance mini:
  Width 40: 206
  Width 80: 246
- x Center distance maxi:
  Width 40: 1 000
  Width 80: 1 000

Gear motors

- x 230 V single-phase and 230/400 V three-phase
  Speed (m/min) +/- 10 %:
  2 - 3 - 6 - 9 - 12 - 18 - 24
- x 24 Vcc on request

Gear motors data: Page 106

Belts

Installation tension: 0,1 %

Belt data: Page 104

Permissible loads: see loads data page 11.

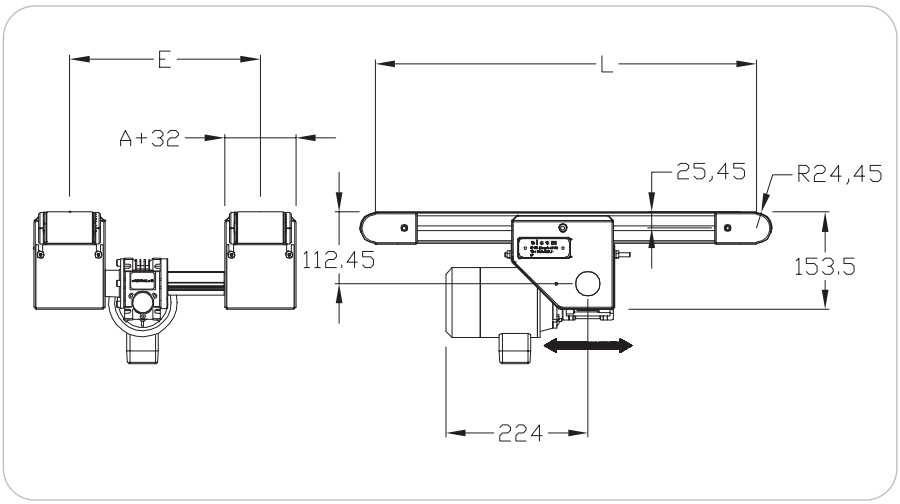

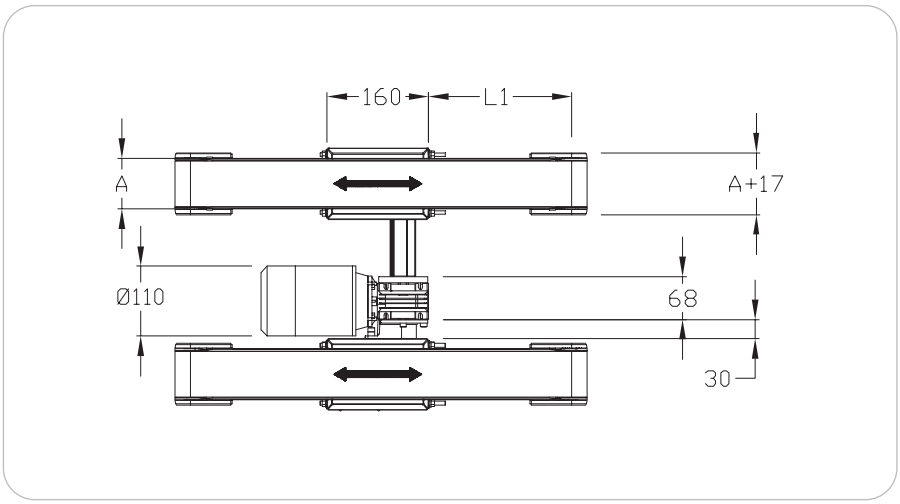

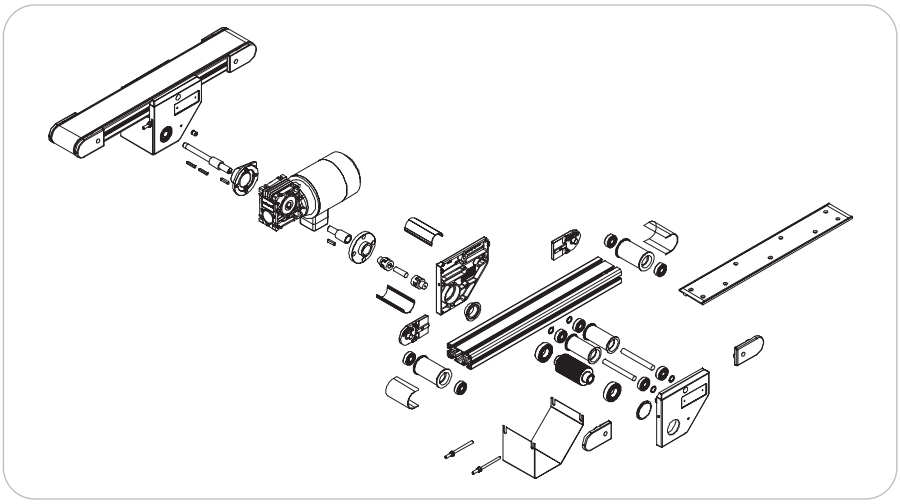

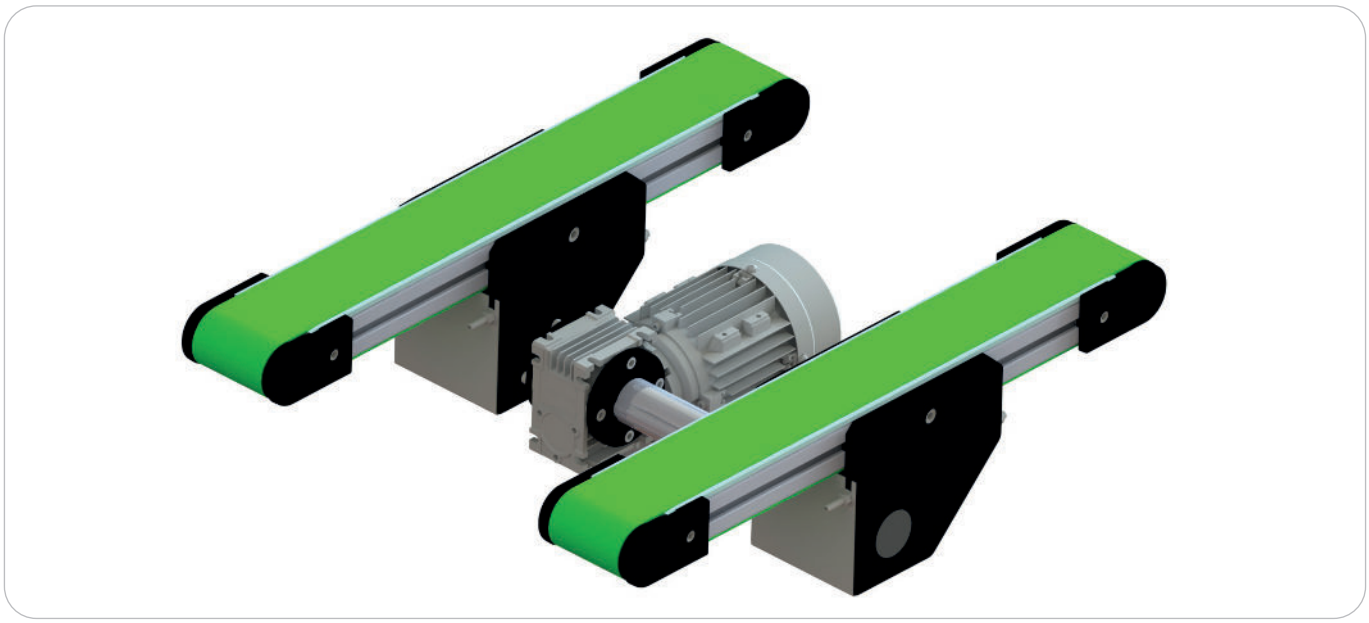

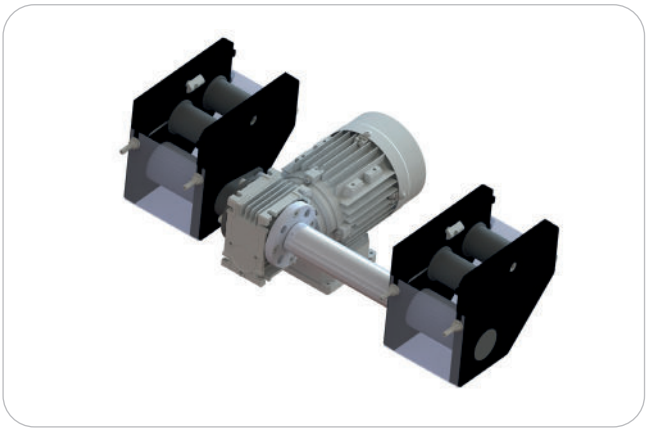

Gear motors positions (see page 106)

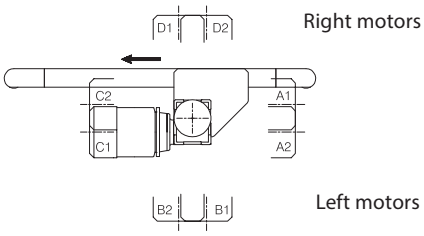

Product description/Dimensions	Order unit	Reference
Conveyor 40 Double timing belt Central drive Internal motor 40 mm	1 pce	C 040 22 000
Conveyor 40 Double timing belt Central drive Internal motor 80 mm	1 pce	C 080 22 000

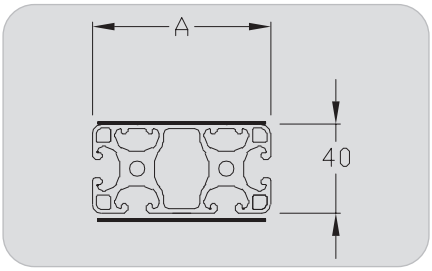

Conveyor 40

Double Timing belt (CC)
End drive
Widths 40, 80 mm

Technical data

Two parallel flat belt conveyors driven by only one motor, for large components.
Two belts enable the use of free space.
Positive driving belt for heavy loads.

- x Pulleys with ball bearings
- x Guiding belt PA material
- x Timing belt, 5 mm step

Dimensions (mm)

- x Width A: 40 - 80
- x Length L: 400 to 6 000
- x Width of belt: 32 and 72 mm
- x Length of belt
  Lc= (2xL+152) x 0,999
- x Length of profile: LP= L-68,5
- x Center distance mini:
  Width 40: 114
  Width 80: 154
- x Center distance maxi:
  Width 40: 1 000
  Width 80: 1 000

Gear motors

- x 230 V single-phase and 230/400 V three-phase
  Speed (m/min) +/- 10 %:
  2 - 3 - 6 - 9 - 12 - 18 - 24
- x 24 Vcc on request

Gear motors data: Page 106

Belts

Installation tension: 0,1 %
Belt data: Page 104

Permissible loads: see loads data page 11.

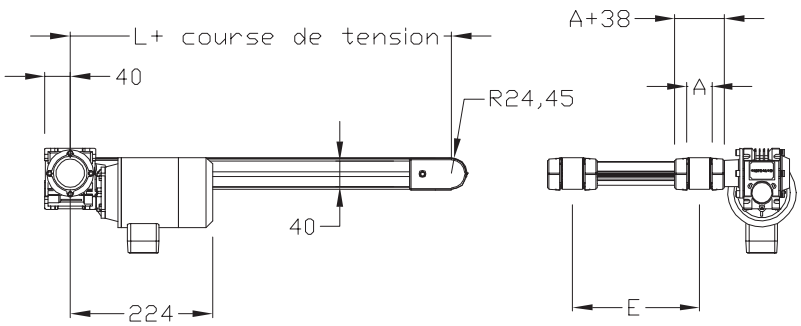

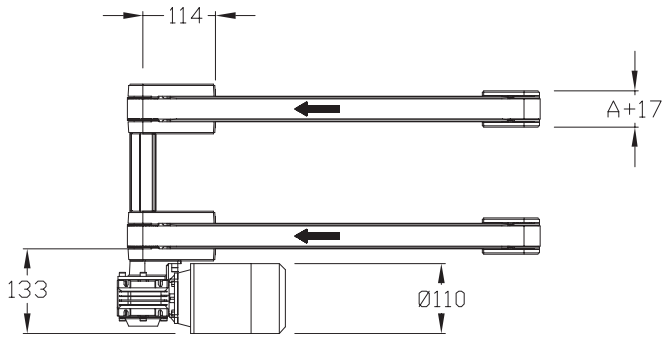

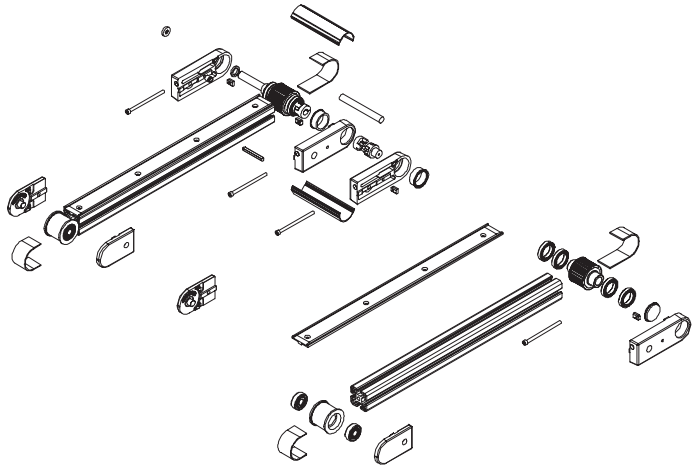

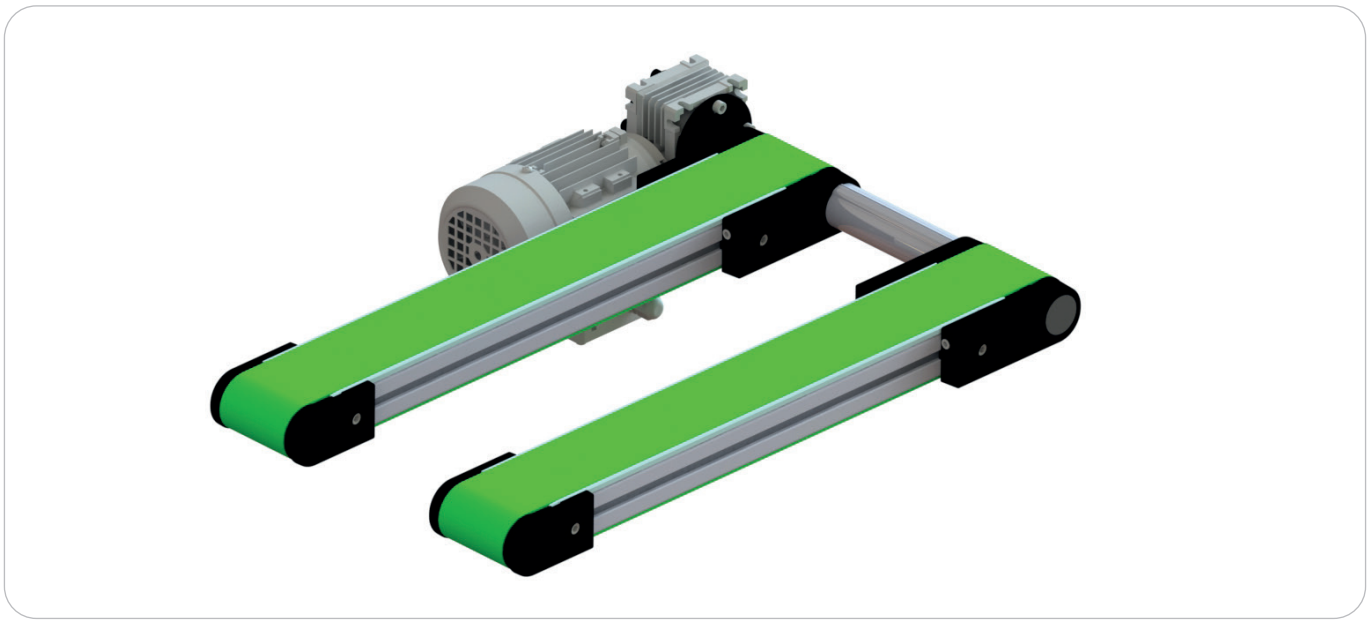

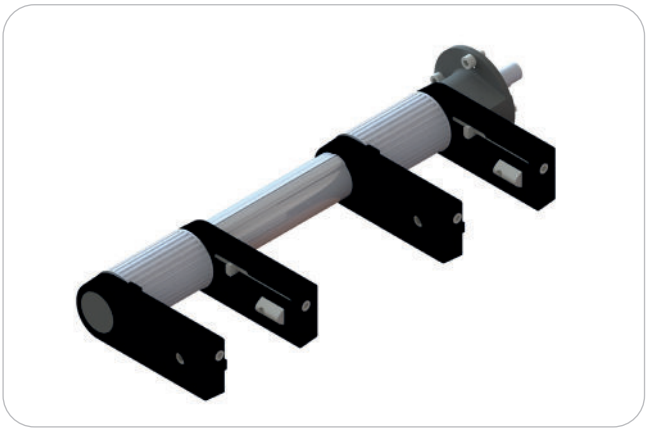

Gear motors positions (see page 106)

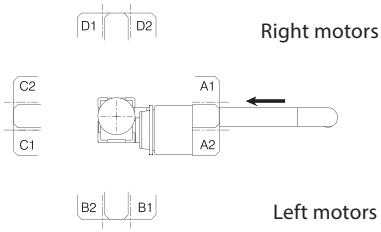

Product description/Dimensions	Order unit	Reference
Conveyor 40 Double timing belt End drive 40 mm	1 pce	C 040 41 000
Conveyor 40 Double timing belt End drive 80 mm	1 pce	C 080 41 000

CONVEYOR 40 INCLINED

Conveyors Inclined Type 1

Widths 200, 300, 400 mm

Technical data

Flat belt conveyor with 1 angle for building elevators thanks to cleated belts.

For light parts maxi 8 kg.

Dimensions (mm)

- Width A: 200 - 300 - 400
- Length: L1 + L2 = 4 000 maxi
- Cleats height: 60 maxi

Gear motors

- 230 V single-phase and 230/400 V three-phase
- 24 Vcc on request

Gear motors data: Page 106

Belts

- Cleated belts only

Belt data: Page 104

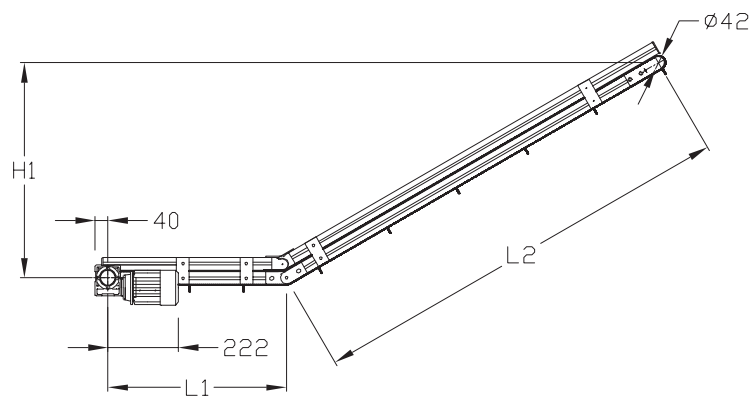

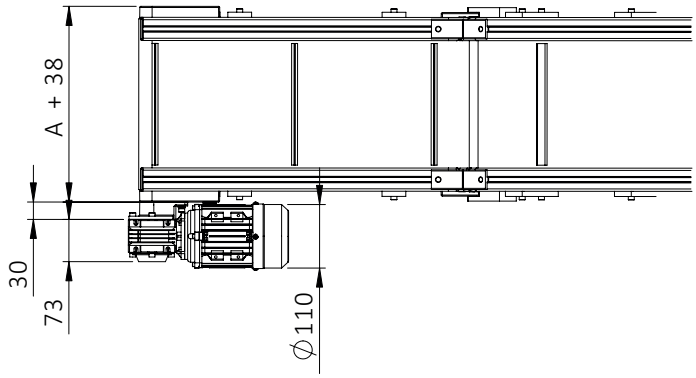

Gear motors positions (see page 106)

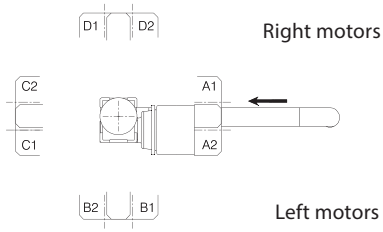

Product description/Dimensions	Order unit	Reference
Conveyor inclined Type 1 Width 200 mm	1 pce	C 200 70 000
Conveyor inclined Type 1 Width 300 mm	1 pce	C 300 70 000
Conveyor inclined Type 1 Width 400 mm	1 pce	C 400 70 000

Conveyors Inclinded Type 2

Widths 200, 300, 400 mm

Technical data

Flat belt conveyor with 1 angle for building elevators thanks to cleated belts.

For light parts maxi 8 kg.

Dimensions (mm)

- Width A: 200 - 300 - 400
- Length : L2 + L3 = 4 000 maxi
- Cleats height: 60 maxi

Gear motors

- 230 V single-phase and 230/400 V three-phase
- 24 Vcc on request

Gear motors data: Page 106

Belts

- Cleated belts only

Belt data: Page 104

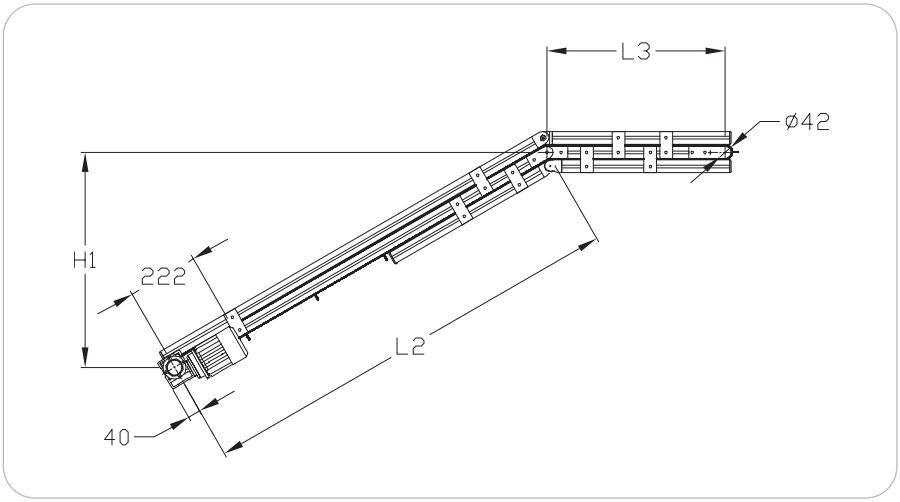

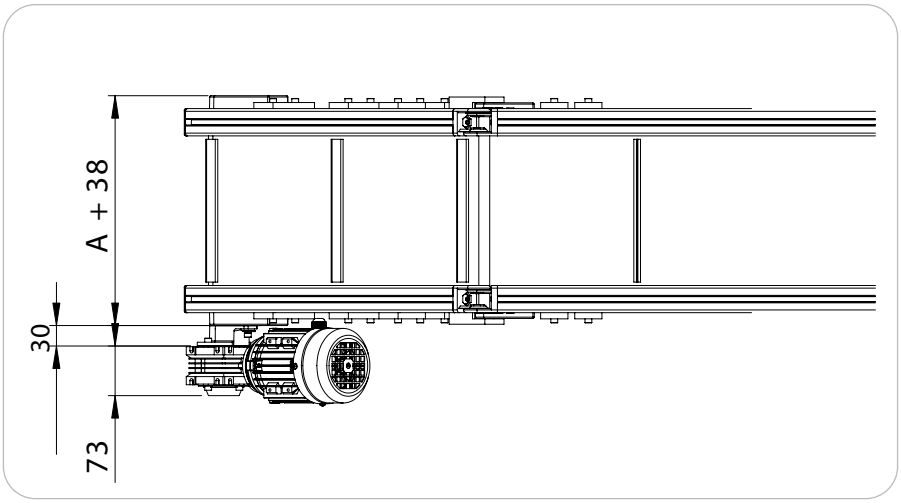

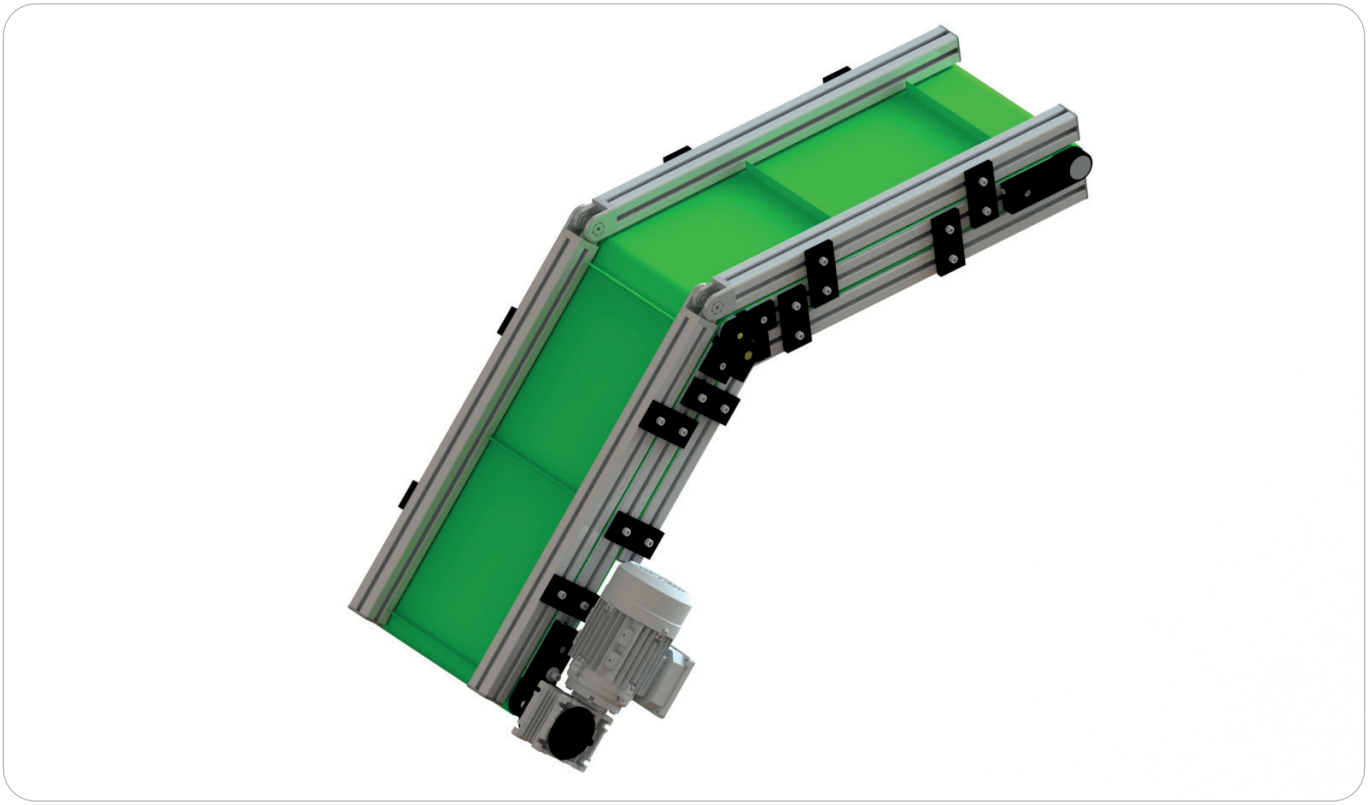

Gear motors positions (see page 106)

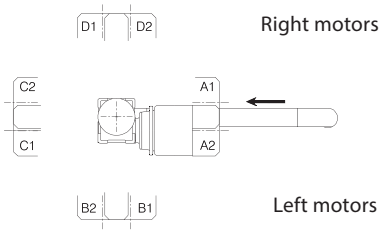

Product description/Dimensions	Order unit	Reference
Conveyor inclined Type 2 Width 200 mm	1 pce	C 200 75 000
Conveyor inclined Type 2 Width 300 mm	1 pce	C 300 75 000
Conveyor inclined Type 2 Width 400 mm	1 pce	C 400 75 000

Conveyors Inclined Type 3

Widths 200, 300, 400 mm

Technical data

Conveyor avec 2 articulations permettant de réaliser des élévateurs de pièces grâce to des bandes to tasseaux.
Adapté aux pièces légères maxi 8 kg.

Dimensions (mm)

- Width A: 200 - 300 - 400
- Length : L1 + L2 + L3 = 4 000 maxi
- Cleats height: 60 maxi

Gear motors

- 230 V single-phase and 230/400 V three-phase
- 24 Vcc on request

Gear motors data: Page 106

Belts

- Cleated belts only

Belt data: Page 104

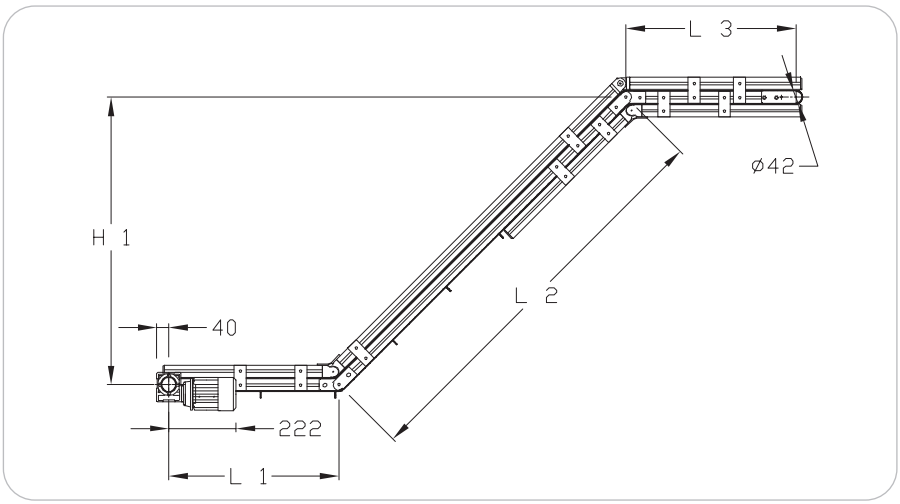

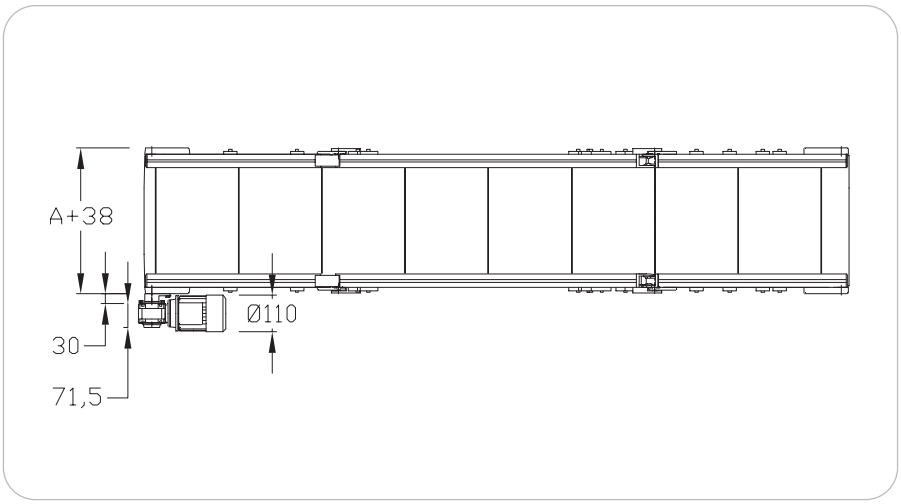

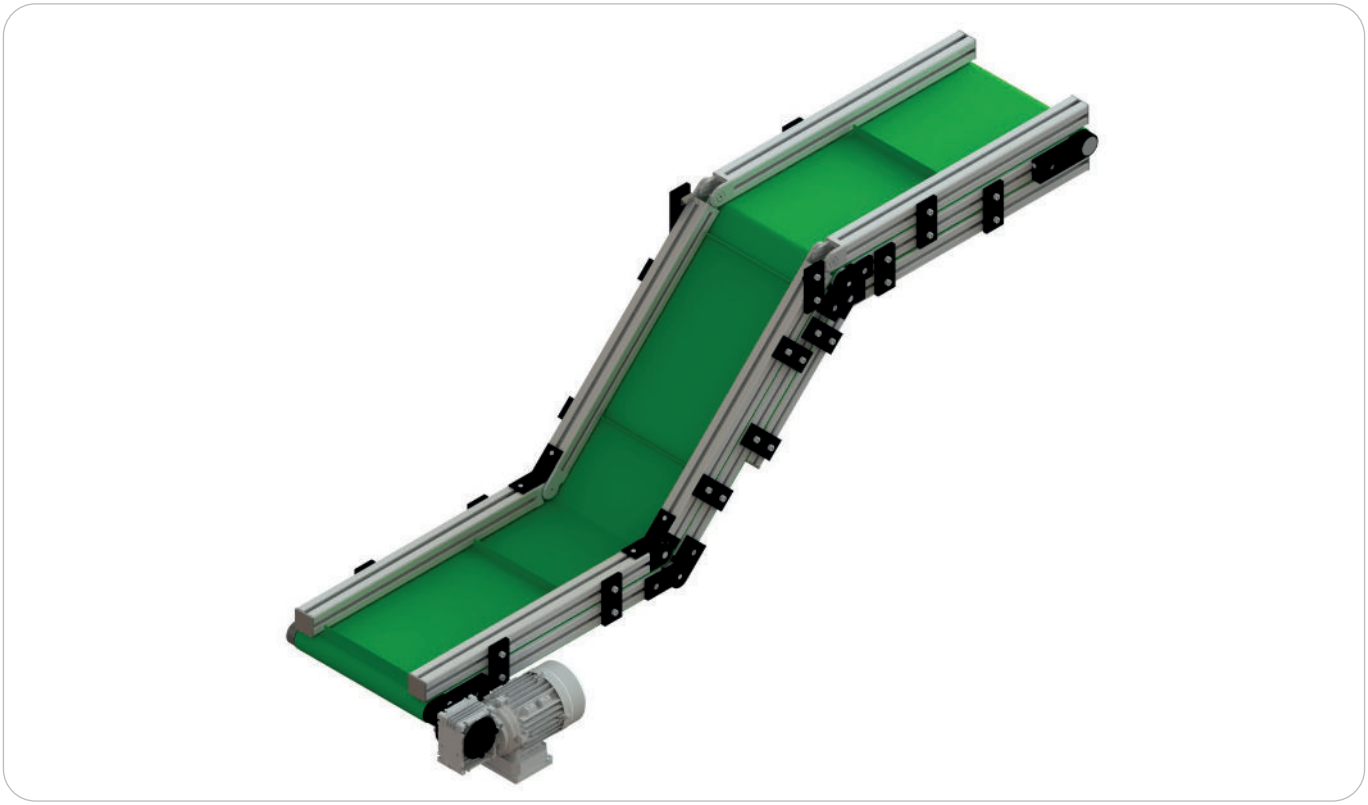

Gear motors positions (see page 106)

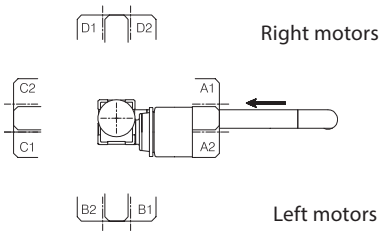

Product description/Dimensions	Order unit	Reference
Conveyor inclined Type 3 Width 200 mm	1 pce	C 200 80 000
Conveyor inclined Type 3 Width 300 mm	1 pce	C 300 80 000
Conveyor inclined Type 3 Width 400 mm	1 pce	C 400 80 000